9-4910-485-34 P

TM 9-4910-485-34P

DEPARTMENT OF THE ARMY TECHNICAL MANUAL

DIRECT SUPPORT, AND GENERAL SUPPORT MAINTENANCE

REPAIR PARTS AND SPECIAL TOOLS LIST

(INCLUDING DEPOT MAINTENANCE

REPAIR PARTS AND SPECIAL TOOLS)

FOR

TEST STAND, AUTOMOTIVE GENERATOR, ALTERNATOR

AND

STARTER, FLOOR MOUNTED, 10 TO 50-V, 500-AMP, DC

(SUN ELECTRIC CORPORATION

MODEL AGT-9 AND AGT-9A)

(4910-767-0218)

D 101.11:

READEX FICHE best copy available

TECHNICAL MANUAL
No. 9-4910-485-34P

HEADQUARTERS,
DEPARTMENT OF THE ARMY
Washington, D.C., *7 December 1971*

DIRECT SUPPORT, AND GENERAL SUPPORT MAINTENANCE REPAIR PARTS AND SPECIAL TOOLS LISTS (INCLUDING DEPOT MAINTENANCE REPAIR PARTS AND SPECIAL TOOLS) FOR TEST STAND, AUTOMOTIVE GENERATOR, ALTERNATOR, AND STARTER, FLOOR MOUNTED, 10 TO 50-V, 500-AMP, DC (SUN ELECTRIC CORPORATION MODEL AGT-9 AND AGT-9A)

(4910-767-0218)

Current as of 1 November 1971.

Table of Contents

		Paragraph	Page
LIST OF ILLUSTRATIONS			2
Section I.	INTRODUCTION		
	Scope	1	3
	General	2	3
	Explanation of columns	3	3
	Special information	4	4
	How to locate repair parts	5	4
	Recommendations for maintenance publication improvements	6	5
Section II.	REPAIR PARTS LIST		
	Test stand AGT 9 and AGT 9A major components		6
	Load bank and blower motor group		6
	Electrical dummy load		7
	Motor varidrive assembly		7
	Varidrive motor assembly		8
	Reduction gear assembly		9
	Transformer panel assembly		11
	Electrical components panel		11
	Main control panel assembly (L.H.)		12
	Main control panel assembly (R.H.)		14
	Accessory group		15
	Cable assembly group		18
Section III.	INDEX—FEDERAL STOCK NUMBER AND REFERENCE NUMBER CROSS-REFERENCE TO FIGURE AND ITEM NUMBER		20

List of Illustrations For TM 9-4910-485-34P

Figure 1.	AGT 9 Test Stand—partially exploded view. (Sheet 1 of 2).	20
Figure 1.	AGT 9 Test Stand—partially exploded view. (Sheet 2 of 2).	21
Figure 2.	Load Bank and Blower Motor Group—exploded view.	22
Figure 3.	Electrical Dummy Load—exploded view.	23
Figure 4.	Motor Varidrive Assembly—exploded view.	24
Figure 5.	Varidrive Motor Assembly—exploded view. (Sheet 1 of 2).	25
Figure 5.	Varidrive Motor Assembly—exploded view. (Sheet 2 of 2).	26
Figure 6.	Reduction Gear Assembly—exploded view.	27
Figure 7.	Transformer Panel Assembly.	28
Figure 8.	Electrical Components Panel.	29
Figure 9.	Main Control Panel Assembly (L. H.)—exploded view. (Sheet 1 of 2).	30
Figure 9.	Main Control Panel Assembly (L.H.)—exploded view. (Sheet 2 of 2).	31
Figure 10.	Main Control Panel Assembly (R.H.)—exploded view.	32
Figure 11.	Accessory Group (Sheet 1 of 2)	33
Figure 11.	Accessory Group (Sheet 2 of 2)	34
Figure 12.	Cable Assembly Group (Sheet 1 of 2).	35
Figure 12.	Cable Assembly Group (Sheet 2 of 2).	35

DIRECT SUPPORT AND GENERAL SUPPORT MAINTENANCE

REPAIR PARTS AND SPECIAL TOOLS LIST

(INCLUDING DEPOT MAINTENANCE REPAIR PARTS AND SPECIAL TOOLS)

Section I. INTRODUCTION

1. Scope.

This manual lists repair parts, special tools and test and support equipment required for the performance of direct support, general support, and depot maintenance of the AGT 9 and AGT 9A test stand.

2. General.

This Repair Parts and Special Tools List is divided into the following sections:

a. *Repair Parts List—Section II.* A list of repair parts authorized at the direct support, general support, and depot levels for the performance of maintenance. The list also includes parts which must be removed for the replacement of the authorized parts. Parts lists are composed of functional groups in ascending numerical sequence, with parts in each group listed in figure and item number sequence.

b. *Federal Stock Number and Reference Number Index—Section III.* A list, in ascending numerical sequence, of all Federal stock numbers appearing in the listings, followed by a list, in alphameric sequence, of all reference numbers are cross referenced to each illustration figure and item number appearance.

3. Explanation of Columns.

The following provides an explanation of columns found in the tabular listings.

a. Source, Maintenance, and Recoverability Codes (SMR).

(1) Source Code. Indicates the source for the listed item. Source Codes are:

Code	*Explanation*
P	Repair parts, special tools, and test equipment supplied from the GSA/DSA, or Army supply system, and authorized for use at indicated maintenance categories.
P2	Repair parts, special tools, and test equipment which are procured and stocked for insurance purposes because the combat or military essentiality of the end item dictates that a minimum quantity be available in the supply system.
P9	Assigned to items which are NSA design controlled: unique repair parts, special tools, test, measuring and diagnostic equipment, which are stocked and supplied by the Army COMSEC Logistic System and which are not subject to the provisions of AR 380-41.
P10	Assigned to items which are NSA design controlled: special tools, test, measuring and diagnostic equipment for COMSEC support which are accountable under the provisions of AR 380-41, and which are stocked and supplied by the Army COMSEC Logistic System.
M	Repair parts, special tools and test equipment which are not procured or stocked as such in the supply system but are to be manufactured at indicated maintenance levels.
A	Assemblies which are not procured or stocked as such but are made up of two or more units. Such component units carry individual stock numbers and descriptions, are procured and stocked separately, and can be assembled to form the required assembly at indicated maintenance categories.
X	Parts and assemblies that are not procured or stocked because the failure rate is normally below that of the applicable end item or component. The failure of such part or assembly should result in retirement of the end item from the supply system.
X1	Repair parts which are not procured or stocked. The requirement for such items will be filled by the next higher assembly or component.
X2	Repair parts, special tools and test equipment which are not stocked and have no foreseen mortality. The indicated maintenance category requiring such repair parts will attempt to obtain the parts through cannibalization or salvage. The item may be requisitioned, with exception data, from the end item manager for immediate use.
G	Major assemblies that are procured with PEMA funds for initial issue only as exchange assemblies at DS and GS level. These assemblies will not be stocked above DS and GS level or returned to depot supply level.

Note. Cannibalization or salvage may be used as a source of supply for any items source coded above except those coded X1 and aircraft support items as restricted by AR 700-42.

(2) Maintenance Code. Indicates the lowest category of maintenance authorized to install the repair part and/or use the special tool or test equipment for each application. Capabilities of higher maintenance categories are considered equal or better. Maintenance codes are:

Code	Explanation
C	Crew / operator
O	Organizational maintenance
F	Direct support maintenance
H	General support maintenance
D	Depot maintenance

(3) Recoverability Code. Indicates whether unserviceable items should be returned for recovery or salvage. Items not coded are nonrecoverable. Recoverability codes are:

Code	Explanation
R	Repair parts (assemblies and components), special tools and test equipment which are considered economically reparable at direct and general support maintenance levels. When the item is no longer economically reparable, it is normally disposed of at the GS level. When supply considerations dictate, some of these repair parts may be listed for automatic return to supply for depot level repair as set forth in AR 710-50. When so listed, they will be replaced by supply on an exchange basis.
S	Repair parts, special tools and test equipment, and assemblies which are economically reparable at DS and GS activities and which normally are furnished by supply on an exchange basis. When items are determined by a GSU to be uneconomically reparable, they will be evacuated to a depot for evaluation and analysis before final disposition.
T	High dollar value recoverable repair parts, special tools and test equipment which are subject to special handling and are issued on an exchange basis. Such items will be repaired or overhauled at depot maintenance activities only. No repair may be accomplished at lower levels.
U	Repair parts, special tools and test equipment specifically selected for salvage by reclamation units because of precious metal content, critical materials, high dollar value, or reusable castings or castings.

b. *Federal Stock Number.* Indicates the Federal stock number assigned to the item and will be used for requisitioning purposes.

c. *Description.* Indicates the Federal item name and a minimum description required to identify the item. The last line indicates the reference number followed by the applicable Federal Supply Code for Manufacturer (FSCM) in parentheses. The FSCM is used as an element in item identification to designate manufacturer or distributor or Government agency, etc., and is identified in SB 708-42. Items that are included in kits and sets are listed below the name of the kit or set with quantity of each item in the kit or set indicated in front of the item name.

d. *Unit of Measure (U/M).* Indicates the standard or basic quantity by which the listed item is used in performing the actual maintenance function. This measure is expressed by a two-character alphabetical abbreviation, e.g., ea, in., pr, etc., and is the basis used to indicate quantities and allowances in subsequent columns. When the unit of measure differs from the unit of issue, the lowest unit of issue that will satisfy the required units of measure will be requisitioned.

e. *Quantity Incorporated in Unit.* Indicates the quantity of the item used in the breakout shown on the illustration figure, which is prepared for a functional group, subfunctional group, or an assembly. A "V" appearing in this column in lieu of a quantity indicates that no specific quantity is applicable, e.g., shims, spacers, etc.

f. *Maintenance Allowances.* All items are authorized for use as required.

g. *Illustration.* This column is divided as follows:

(1) *Figure Number.* Indicates the figure number of the illustration on which the item is shown.

(2) *Item Number.* Indicates the callout number used to reference the item on the illustration.

4. Special Information.

a. Usable on codes are included in column 3. Uncoded items are applicable to all models. Identifications of the usable on codes used in this publication are:

Code	Used On
A	AGT 9
B	AGT 9A

b. There are no special tools, test or support equipment authorized for the AGT 9 or AGT 9A test stand.

5. How to Locate Repair Parts.

a. When Federal stock number or reference number is unknown:

(1) Using the table of contents determine the assembly or subassembly within which the repair part belongs. This is necessary since illustrations are prepared for assemblies or subassemblies, and listings are divided into the same groups.

(2) Find the illustration covering the assembly or subassembly to which the repair part belongs.

(3) Identify the repair part on the illustration and note the illustration figure and item number of the repair part.

(4) Using the Repair Parts Listing, find the assembly or subassembly to which the repair part belongs and locate the illustration figure and item number noted on the illustration.

b. When Federal stock number or reference number is known:

(1) Using the Index of Federal Stock Numbers and Reference Numbers find the pertinent Federal stock number or reference number. This index is in ascending FSN sequence followed by a list of reference numbers in ascending

alphameric sequence, cross-referenced to the illustration figure number and item number.

(2) Using the Repair Parts Listing, find the assembly or subassembly of the repair part and the illustration figure number and item number referenced in the Index of Federal Stock Numbers and Reference Numbers.

6. Recommendations for Maintenance Publications Improvements.

You can improve this manual by calling attention to errors and by recommending improvements, using DA Form 2028 (Recommended Changes to Publications) or by a letter, and mailing directly to: Commanding General, Headquarters, U. S. Army Weapons Command, ATTN: AMSWE-MAP, Rock Island, Illinois 61201. A reply will be furnished directly to you.

SECTION II. REPAIR PARTS

(1) SMR CODE	(2) FEDERAL STOCK NUMBER	(3) DESCRIPTION	(4) UNIT OF MEAS.	(5) QTY INC IN UNIT	(6) 30-DAY DS MAINT. ALLOWANCE (a) 1-20	(b) 21-50	(c) 51-100	(7) 30-DAY GS MAINT. ALLOWANCE (a) 1-20	(b) 21-50	(c) 51-100	(8) 1-YR ALW PER 100 EQUIP CNTGCY	(9) DEPOT MAINT ALW PER 100 EQUIP	(10) ILLUSTRATION (a) FIGURE NO.	(b) ITEM NO.
		MAJOR COMBINATION												
X2-F		LOAD BANK AND BLOWER MOTOR GROUP: C548-1000 (82386)	EA	1	..	..	..	..	..	..	..	..	1	1
X2-H		MOTOR VARIDRIVE ASSEMBLY:	EA	1	..	..	..	..	..	..	..	..	1	2
X2-F		TRANSFORMER PANEL ASSEMBLY: A C548-5431 (82386)	EA	1	..	..	..	..	..	..	..	..	1	3
P2-F-R	.....	TRANSFORMER PANEL ASSEMBLY: B C619-5431 (82386)	EA	1	*	*	*	*	*	*	*	*	..	..
X2-F		ELECTRICAL COMPONENT PANEL: C548-5432 (82386)	EA	1	..	..	..	..	..	..	..	..	1	4
X2-H		MAIN CONTROL PANEL ASSEMBLY: (L.H.) C548-1400 (82386)	EA	1	..	..	..	..	..	..	..	..	1	5
X2-F		MAIN CONTROL PANEL ASSEMBLY: (R.H.) C548-1407 (82386)	EA	1	..	..	..	..	..	..	..	..	1	6
		LOAD BANK AND BLOWER MOTOR GROUP C548-1000 (82386)												
X2 F	.....	DUCT, LOAD BANK AIR DISCHARGE: 6 inch dia X 6 inch long, galv C548-1228 (82386)	EA	1	..	..	..	..	..	..	..	..	2	1
P-F	4910-431-8363	CHAMBER, LOAD BANK: C548-2233 (82386)	EA	1	*	*	*	*	*	*	*	*	2	2
P-F	4910-461-1032	DUMMY LOAD, ELECTRICAL: 15 kw 8001-5001 (82386)	EA	1	*	*	*	*	*	*	*	*	2	3
P-F	5305-068-0501	SCREW, CAP, HEXAGON HEAD: ¼-20 X ⅝ MS90725-5 (96906)	EA	8	*	*	*	*	*	*	*	*	2	4
P-F	5310-582-5965	WASHER, LOCK: ¼ I.D. MS35338-44 (96906)	EA	8	*	*	*	*	*	*	*	*	2	5
P-F	5310-809-4058	WASHER, FLAT: ¼ I.D. MS 27183-10 (96906)	EA	8	*	*	*	*	*	*	*	*	2	6
X2 F	.....	COVER, BLOWER HOUSING: no P/N available (82386)	EA	1	..	..	..	..	..	..	..	..	2	7
P-F	5305-988-1723	SCREW, MACHINE: pan head, stl, cad-pltd, ¼-20UNC-2A, ½ in. lg w/chromate MS 35207-279 (96906)	EA	4	*	*	*	*	*	*	*	*	2	8
P-F	5310-550-1130	WASHER, LOCK: ¼ I.D. MS 35333-40 (96906)	EA	4	*	*	*	*	*	*	*	*	2	9
X2 F	.....	PAN, BLOWER: no P/N available (82386)	EA	1	..	..	..	..	..	..	..	..	2	10
X2 F	.....	KEY, MACHINE: 3/16 sq X 1¼ lg no P/N available (82386)	EA	1	..	..	..	..	..	..	..	..	2	11

SECTION II. REPAIR PARTS

(1) SMR CODE	(2) FEDERAL STOCK NUMBER	(3) DESCRIPTION	(4) UNIT OF MEAS.	(5) QTY INC IN UNIT	(6) 30-DAY DS MAINT. ALLOWANCE (a) 1-20	(b) 21-60	(c) 61-100	(7) 30-DAY GS MAINT. ALLOWANCE (a) 1-20	(b) 21-60	(c) 61-100	(8) 1-YR ALW PER 100 EQUIP CNTGCY	(9) DEPOT MAINT ALW PER 100 EQUIP	(10) ILLUSTRATION (a) FIGURE NO.	(b) ITEM NO.
		LOAD BANK AND BLOWER MOTOR GROUP —Continued												
P-F	5305-723-9385	SETSCREW: ¼-20 X ⅜ MS 51963-65 (96906)	EA	1	*	*	*	*	*	*	*	*	2	12
P-F	4910-431-8364	HOUSING, BLOWER FAN: 806-5001 (82386)	EA	1	*	*	*	*	*	*	*	*	2	13
X1	.....	STAND, BLOWER MOTOR: (82386)	EA	1	..	..	..	..	..	..	..	..	2	14
P-F	5310-880-7746	NUT, HEXAGON: 5/16-24 MS 51968-5 (96906)	EA	V	*	*	*	*	*	*	*	*	2	15
P-F	6105-470-7484	MOTOR: ac, 220 V 0502-5001 (82386)	EA	1	*	*	*	*	*	*	*	*	2	16
P-F	5310-081-4219	WASHER, FLAT: 5/16 I.D. MS 27183-12 (96906)	EA	V	*	*	*	*	*	*	*	*	2	17
P-F	5310-407-9566	WASHER, LOCK: 5/16 I.D. MS 35338-45 (96906)	EA	V	*	*	*	*	*	*	*	*	2	18
P-F	5306-225-9089	BOLT, MACHINE: 5/16-24 X 1 MS 90726-34 (96906)	EA	V	*	*	*	*	*	*	*	*	2	19
P-F	5305-068-0498	SCREW, CAP, HEXAGON HEAD: ¼-20 X ½ MS 90725-1 (96906)	EA	V	*	*	*	*	*	*	*	*	2	20
P-F	5305-989-7434	SCREW, MACHINE: pan head, STL, cad-pltd, no. 10 (.190 in.) -32-3A, 112 in. lg, w/chromate MS 35207-263 (96906)	EA	V	*	*	*	*	*	*	*	*	2	21
P-F	5310-014-5850	WASHER, FLAT: 0.190 I.D. MS 27183-42 (96906)	EA	V	*	*	*	*	*	*	*	*	2	22
P-F	5310-045-3296	WASHER, LOCK: 0.190 I.D. MS 35338-43 (96906)	EA	V	*	*	*	*	*	*	*	*	2	23
		ELECTRICAL DUMMY LOAD 8001-5001 (82386)												
X2-F	.....	ELEMENT ASSEMBLY, RESISTIVE: 25 amp, 30 V, DC 8033-5501 (82386)	EA	V	..	..	..	..	..	..	..	..	3	1
X1	.....	MODULE, RESITIVE: 15 KW (82386)	EA	1	..	..	..	..	..	..	..	..	3	2
		MOTOR VARIDRIVE ASSEMBLY 3046-5001												
X2-H	.....	MOTOR: 22½ h.p. XC584426 (79938)	EA	1	..	..	..	..	..	..	..	..	4	1
P2-H	4910-137-2086	BRACKET, SUPPORT: X214651B (79938)	EA	1	*	*	*	*	*	*	*	*	4	2

SECTION II. REPAIR PARTS

(1) SMR CODE	(2) FEDERAL STOCK NUMBER	(3) DESCRIPTION	(4) UNIT OF MEAS.	(5) QTY INC IN UNIT	(6) 30-DAY DS MAINT. ALLOWANCE (a) 1-20	(b) 21-60	(c) 61-100	(7) 30-DAY GS MAINT. ALLOWANCE (a) 1-20	(b) 21-60	(c) 61-100	(8) 1-YR ALW PER 100 EQUIP CNTGCY	(9) DEPOT MAINT ALW PER 100 EQUIP	(10) ILLUSTRATION (a) FIGURE NO.	(b) ITEM NO.
		MOTOR VARIDRIVE ASSEMBLY —Continued												
X2-H	.....	FRAME: 15869 (79938)	EA	1	..	..	..	..	..	..	..	..	4	3
X1	.....	REDUCTION GEAR ASSEMBLY: (79938)	EA	1	..	..	..	..	..	..	..	..	4	4
X2-H	.....	ADAPTER, BRACKET ASSEMBLY: 555742 (79938)	EA	1	..	..	..	..	..	..	..	..	4	5
P-F	3030-249-4311	BELT, V: single arched, cog constructed X581097 (81300)	EA	1	*	*	*	*	*	*	*	*	4	6
		VARIDRIVE MOTOR ASSEMBLY												
X2-H	.....	BRACKET: A111497-B (79938)	EA	1	..	..	..	..	..	..	..	..	5	1
X2-H	.....	LOCKNUT: DZ-4119-A (79938)	EA	1	..	..	..	..	..	..	..	..	5	2
X2-H	.....	LOCKWASHER: 4120 (79938)	EA	1	..	..	..	..	..	..	..	..	5	3
X2-H	.....	BEARING, BALL: 13504 (79938)	EA	1	..	..	..	..	..	..	..	..	5	4
X2-H	.....	CAP, BEARING: clamping C76070 (79938)	EA	1	..	..	..	..	..	..	..	..	5	5
X2-H	.....	SHAFT, MOTOR, VARIDRIVE: XD566767-43 (79938)	EA	1	..	..	..	..	..	..	..	..	5	6
X2-H	.....	CAP, BEARING: 136610 (79938)	EA	1	..	..	..	..	..	..	..	..	5	7
X2-H	.....	BEARING, BALL: 128701 (79938)	EA	1	..	..	..	..	..	..	..	..	5	8
X2-H	.....	STATOR, WOUND ASSEMBLY: XA584484 (79938)	EA	1	..	..	..	..	..	..	..	..	5	9
X2-H	.....	HOUSING, CONTROL BEARING: A15683 (79938)	EA	1	..	..	..	..	..	..	..	..	5	10
X2-H	.....	LOCKNUT: AN15 (79738)	EA	1	..	..	..	..	..	..	..	..	5	11
X2-H	.....	KEY WASHER: W15 (79938)	EA	1	..	..	..	..	..	..	..	..	5	12
P-H	3110-156-4755	BEARING, BALL, ANNULAR: I.D. 2.9528, O.D. 5.1181, width 1.625 5215 (52676)	EA	1	*	*	*	*	*	*	*	*	5	13
X2-H	.....	RETAINER, BEARING: A156848 (79938)	EA	1	..	..	..	..	..	..	..	..	5	14

SECTION II. REPAIR PARTS

(1) SMR CODE	(2) FEDERAL STOCK NUMBER	(3) DESCRIPTION	(4) UNIT OF MEAS.	(5) QTY INC IN UNIT	(6) 30-DAY DS MAINT. ALLOWANCE			(7) 30-DAY GS MAINT. ALLOWANCE			(8) 1-YR ALW PER 100 EQUIP CNTGCY	(9) DEPOT MAINT ALW PER 100 EQUIP	(10) ILLUSTRATION	
					(a) 1-20	(b) 21-50	(c) 51-100	(a) 1-20	(b) 21-50	(c) 51-100			(a) FIGURE NO.	(b) ITEM NO.
		VARIDRIVE MOTOR ASSEMBLY —Continued												
X2-H	.....	VARIDISC ASSEMBLY, ADJUSTABLE MOTOR: X581095A (79938)	EA	1	..	..	..	..	..	..	..	..	5	15
		Composed of:												
X2-H	.....	VARIDISC, ADJUSTABLE MOTOR: XF134956 (79938)	EA	1	..	..	..	..	..	..	..	..	..	..
X2-H	.....	BUSHING, PLASTIC: XA574732A (79938)	EA	1	..	..	..	..	..	..	..	..	..	..
P2-H	4910-137-2092	ENDOLUBE WEDGE: E136807A (79938)	EA	1	..	..	..	..	..	..	..	..	..	..
X2-H	.....	VARIDISC ASSEMBLY, STATIONARY: XB136445 (79938)	EA	1	..	..	..	..	..	..	..	..	5	16
X2-F	.....	HOSE, LUBRICATING: low pressure oil-resistant rubber hose B1430-14 (79470)	EA	1	..	..	..	..	..	..	..	..	5	17
P2-H	4910-137-2081	LEVER, SHIFTING: C15848 (79938)	EA	1	*	*	*	*	*	*	*	*	5	18
P2-H	4910-137-2090	CONTROL NUT ASSEMBLY: H36472 (79938)	EA	1	*	*	*	*	*	*	*	*	5	19
P2-H	4910-137-2082	SCREW, CONTROL STOP: varidrive, high speed, 4 inches long X .203 dia A15959 (79938)	EA	1	*	*	*	*	*	*	*	*	5	20
X2-H	.....	BEARING, NEEDLE: 15961 (79938)	EA	1	..	..	..	..	..	..	..	..	5	21
P2-H	4910-137-2089	SHAFT, CONTROL: 1-8 thd per inch, U.S.F. form R.H. quadrupled XA551411-B (79938)	EA	1	*	*	*	*	*	*	*	*	5	22
		REDUCTION GEAR ASSEMBLY												
X2-H	.....	SNAP RING: 95250 (79938)	EA	1	..	..	..	..	..	..	..	..	6	1
X2-H	.....	SHAFT, VARIABLE, GEARED: XC552390-B (79938)	EA	1	..	..	..	..	..	..	..	..	6	2
X2-H	.....	BEARING, BALL: ND5611-L1A (43334)	EA	1	..	..	..	..	..	..	..	..	6	3
P H	5315-781-2025	KEY, MACHINE: 0.375 inch X 0.375 inch X 3 inches MS 20068-253 (96906)	EA	1	*	*	*	*	*	*	*	*	6	4
X2-H	.....	KEY WASHER: 4120 (79938)	EA	1	..	..	..	..	..	..	..	..	6	5
X2-H	.....	LOCKNUT: DZ-4119-A (79938)	EA	1	..	..	..	..	..	..	..	..	6	6

SECTION II. REPAIR PARTS

(1) SMR CODE	(2) FEDERAL STOCK NUMBER	(3) DESCRIPTION	(4) UNIT OF MEAS.	(5) QTY INC IN UNIT	(6) 30-DAY DS MAINT. ALLOWANCE			(7) 30-DAY GS MAINT. ALLOWANCE			(8) 1-YR ALW PER 100 EQUIP CNTGCY	(9) DEPOT MAINT ALW PER 100 EQUIP	(10) ILLUSTRATION	
					(a) 1-20	(b) 21-50	(c) 51-100	(a) 1-20	(b) 21-50	(c) 51-100			(a) FIGURE NO.	(b) ITEM NO.
		REDUCTION GEAR ASSEMBLY —Continued												
X2-H	.....	GEAR: 71 teeth X135500-A (79938)	EA	1	..	..	..	..	..	..	..	..	6	7
X2-H	.....	GEAR: 55 teeth X135500-A (79938)	EA	1	..	..	..	..	..	..	..	..	6	8
X2-H	.....	LOCKNUT: DZ-4814-A (79938)	EA	2	..	..	..	..	..	..	..	..	6	9
X2-H	.....	BEARING, BALL: SKF6405 (52676)	EA	2	..	..	..	..	..	..	..	..	6	10
X2-H	.....	SHAFT, LOW SPEED: X135504 (79938)	EA	1	..	..	..	..	..	..	..	..	6	11
X2-H	.....	CLAMPING RING: D-27183 (79938)	EA	2	..	..	..	..	..	..	..	..	6	12
X2-H	.....	BEARING, BALL: SKF6309 (52676)	EA	2	..	..	..	..	..	..	..	..	6	13
X2-H	.....	SHIM: 3-5/16 inches ID, 3-15/16 inches OD, .009 thk	EA	2	..	..	..		..	..	..	..	6	14
X2-H	.....	KEY WASHER: 60M (79938)	EA	2	..	..	..	..	..	..	..	..	6	15
X2-H	.....	LOCKNUT: M-60-N (79938)	EA	2	..	..	..	..	..	..	..	..	6	16
X2-H	.....	GEAR CASE AND MOUNTING BRACKET ASSY: XC556522 (79938)	EA	1	..	..	..	..	..	..	..	..	6	17
X2-H	.....	CAP, BEARING: XA504119 (79938)	EA	1	..	..	..	..	..	..	..	..	6	18
X2-H	.....	CAP, BEARING: C48859 (79938)	EA	1	..	..	..	..	..	..	..	..	6	19
X2-H	.....	SHAFT, TAKEOFF, PINION: X135503 (79938)	EA	1	..	..	..	..	..	..	..	..	6	20
X2-H	.....	COLLAR, SPRING: C136416 (79938)	EA	1	..	..	..	..	..	..	..	..	6	21
X2-H	.....	SPRING, COIL: XA224027-A (79938)	EA	1	..	..	..	..	..	..	..	..	6	22
X2-H	.....	RETAINER, SPRING: XB566978A (79938)	EA	1	..	..	..	..	..	..	..	..	6	23
X2-H	.....	VARIDISC ASSEMBLY, ADJUSTABLE DRIVEN: X581096 (79938)	EA	1	..	..	..	..	..	..	..	..	6	24
X2-H	.....	VARIDISC ASSEMBLY, STATIONARY: XD134958 (79938)	EA	1	..	..	..	..	..	..	..	..	6	25

SECTION II. REPAIR PARTS

(1) SMR CODE	(2) FEDERAL STOCK NUMBER	(3) DESCRIPTION	(4) UNIT OF MEAS.	(5) QTY INC IN UNIT	(6) 30-DAY DS MAINT. ALLOWANCE (a) 1-20	(b) 21-50	(c) 51-100	(7) 30-DAY GS MAINT. ALLOWANCE (a) 1-20	(b) 21-50	(c) 51-100	(8) 1-YR ALW PER 100 EQUIP CNTGCY	(9) DEPOT MAINT ALW PER 100 EQUIP	(10) ILLUSTRATION (a) FIGURE NO.	(b) ITEM NO.
		TRANSFORMER PANEL ASSEMBLY: A C548-5431 (82386)												
P-F	5950-936-8102	TRANSFORMER: A 0778-5002 (82386)	EA	1	*	*	*	*	*	*	*	*	7	1
P-F	6130-460-7168	BATTERY CHARGER: A 0778-5004 (82386)	EA	1	*	*	*	*	*	*	*	*	7	2
P-F	6130-460-7171	POWER SUPPLY: A 0778-5003 (82386)	EA	1	*	*	*	*	*	*	*	*	7	3
P-F	5925-936-8094	CIRCUIT BREAKER: 1922-5008 (82386)	EA	1	*	*	*	*	*	*	*	*	7	4
P-F	5950-936-8099	TRANSFORMER: A 0778-5005 (82386)	EA	1	*	*	*	*	*	*	*	*	7	5
P-F	5961-936-8097	SEMICONDUCTOR DEVICE, DIODE: 0771-5001 (82386)	EA	1	*	*	*	*	*	*	*	*	7	6
		TRANSFORMER PANEL ASSEMBLY: B C619-5431 (82386)												
P2 F R	.....	TRANSFORMER: B 0778-5025 (82386)	EA	1	*	*	*	*	*	*	*	*		..
		ELECTRICAL COMPONENTS PANEL C548-5432 (82386)												
P-O	5930-357-0641	SWITCH, KNIFE: 0516-5001 (82386)	EA	1	*	*	*	*	*	*	*	*	8	1
P-F	5925-936-8095	CIRCUIT BREAKER: 1922-5004 (82386)	EA	1	*	*	*	*	*	*	*	*	8	2
P-C	5920-465-8906	FUSE: cartridge, 10 amp ferrule type 739-014 (82386)	EA	2	*	*	*	*	*	*	*	*	8	3
P-F	5920-465-8908	HOLDER, FUSE: 1417-004 (82386)	EA	1	*	*	*	*	*	*	*	*	8	4
P-H	5905-936-8106	POTENTIOMETER: 0685-5006 (82386)	EA	1	*	*	*	*	*	*	*	*	8	5
P-F	5999-460-7191	CONTACT, ELECTRICAL: 3174-019 (82386)	EA	1	*	*	*	*	*	*	*	*	8	6
P-F	5999-460-7183	CONTACT, ELECTRICAL: 3174-016 (82386)	EA	1	*	*	*	*	*	*	*	*	8	7
P-F	5999-460-7195	CONTACT, ELECTRICAL: 3174-017 (82386)	EA	1	*	*	*	*	*	*	*	*	8	8
X1	.....	CONNECTOR, ELECTRICAL: (82386)	EA	1	..	..	..	..	..	..	..	..	8	9
P-O	6625-936-8062	SHUNT, INSTRUMENT: 744-5003 (82386)	EA	3	*	*	*	*	*	*	*	*	8	10

(1) SMP. CODE	(2) FEDERAL STOCK NUMBER	(3) DESCRIPTION	(4) UNIT OF MEAS.	(5) QTY INC IN UNIT	(6) 30-DAY DS MAINT. ALLOWANCE (a) 1-50	(b) 51-80	(c) 81-100	(7) 30-DAY GS MAINT. ALLOWANCE (a) 1-20	(b) 21-80	(c) 81-100	(8) 1-YR ALW PER 100 EQUIP CNTGCY	(9) DEPOT MAINT ALW PER 100 EQUIP	(10) ILLUSTRATION (a) FIGURE NO.	(b) ITEM NO.
		ELECTRICAL COMPONENTS PANEL —Continued												
P-F	5905-231-7692	RESISTOR, FIXED, WIRE WOUND: 684-390 (82386)	EA	1	*	*	*	*	*	*	*	*	8	11
P-F	6625-466-1996	SHUNT, INSTRUMENT: 5 amp, 50 MV 0744-5001 (82386)	EA	1	*	*	*	*	*	*	*	*	8	12
P-C	6110-465-9134	HEATER, THERMAL RELEASE: 220 V W158 (21741)	EA	2	*	*	*	*	*	*	*	*	8	13
P-C	6110-465-9133	HEATER, THERMAL RELEASE: 440 V W151 (21741)	EA	2	*	*	*	*	*	*	*	*	8	13
P-O	6110-461-1044	OVERLOAD, MOTOR START: 0794-5402 (82386)	EA	2	*	*	*	*	*	*	*	*	8	14
P-F	5930-936-8105	SWITCH: micro 2207-5002 (82386)	EA	1	*	*	*	*	*	*	*	*	8	15
		MAIN CONTROL PANEL ASSEMBLY (L.H.) C548-1400 (82386)												
P-F	6625-466-1990	AMMETER, RECORDING: 0500-6002 (82386)	EA	1	*	*	*	*	*	*	*	*	9	1
P-F	6625-466-1991	AMMETER, RECORDING: 0500-6001 (82386)	EA	1	*	*	*	*	*	*	*	*	9	2
P-F	6625-466-1992	VOLTMETER, ELECTRONIC: 0500-6004 (82386)	EA	1	*	*	*	*	*	*	*	*	9	3
P-F	6680-465-1994	VOLTMETER, ELECTRONIC: DC 3½ inch 0500-6003 (82386)	EA	1	*	*	*	*	*	*	*	*	9	4
P-F	6680-465-8905	TACHOMETER: 0500-5005 (82386)	EA	1	*	*	*	*	*	*	*	*	9	5
P-F	6625-466-1989	AMMETER, RECORDING: 0500-5003 (82386)	EA	1	*	*	*	*	*	*	*	*	9	6
P-F	6625-466-1993	VOLTMETER, ELECTRONIC: 0500-5004 (82386)	EA	1	*	*	*	*	*	*	*	*	9	7
P-F	6625-466-2000	AMMETER: jack 0828-5001 (82386)	EA	1	*	*	*	*	*	*	*	*	9	8
P-O		KNOB, ROTARY SWITCH: 758-114 (82386)	EA	12	*	*	*	*	*	*	*	*	9	9
P-O	5355-351-2914	KNOB, VARIABLE RESISTOR: 1493-3 (82386)	EA	1	*	*	*	*	*	*	*	*	9	10
X2-F	.....	RESISTOR ASSEMBLY: tach C548-5413 (82386)	EA	1	..	..	..	..	..	..	..	..	9	11
P-F	5905-762-4696	RESISTOR, VARIABLE, WIRE WOUND: 0685-5001 (82386)	EA	1	*	*	*	*	*	*	*	*	9	12

SECTION II. REPAIR PARTS

(1) SMR CODE	(2) FEDERAL STOCK NUMBER	(3) DESCRIPTION	(4) UNIT OF MEAS.	(5) QTY INC IN UNIT	(6) 30-DAY DS MAINT. ALLOWANCE (a) 1-20	(b) 21-50	(c) 51-100	(7) 30-DAY GS MAINT. ALLOWANCE (a) 1-20	(b) 21-50	(c) 51-100	(8) 1-YR ALW PER 100 EQUIP CNTGCY	(9) DEPOT MAINT ALW PER 100 EQUIP	(10) ILLUSTRATION (a) FIGURE NO.	(b) ITEM NO.
		MAIN CONTROL PANEL ASSEMBLY (L.H.) —Continued												
P-F	5930-655-1522	SWITCH, TOGGLE: MS 35058-30 (96906)	EA	1	*	*	*	*	*	*	*	*	9	13
X2 F	.....	POST, BINDING: black 47D1367 (99664)	EA										9	14
X2 F	.....	POST, BINDING: red 47D1368 (99664)	EA										9	15
P-F	5930-357-0444	SWITCH, ROTARY: 0762-5006 (82386)	EA	1	*	*	*	*	*	*	*	*	9	16
P-F	5930-357-0341	SWITCH, ROTARY: 0762-5002 (82386)	EA	3	*	*	*	*	*	*	*	*	9	17
P-F	5930-357-0431	SWITCH, ROTARY: 0762-5005 (82386)	EA	1	*	*	*	*	*	*	*	*	9	18
P-F	5930-357-0363	SWITCH, ROTARY: 0762-5003 (82386)	EA	3	*	*	*	*	*	*	*	*	9	19
P-F	5930-357-0427	SWITCH, ROTARY: 0762-5004 (82386)	EA	3	*	*	*	*	*	*	*	*	9	20
P-F	5930-936-8073	SWITCH, ROTARY: 0762-5001 (82386)	EA	2	*	*	*	*	*	*	*	*	9	21
X2 F	.....	RESISTOR ASSEMBLY: MVM C548-5415 (82386)	EA	1									9	22
P-F	5930-655-1515	SWITCH, TOGGLE: MS 35058-23 (96906)	EA	2	*	*	*	*	*	*	*	*	9	23
P-F	5910-936-8103	CAPACITOR: 679-362 (82386)	EA	1	*	*	*	*	*	*	*	*	9	24
P-F	5935-936-8112	JACK, TELEPHONE: 3931-5001 (82386)	EA	1	*	*	*	*	*	*	*	*	9	25
P-F	5930-655-1513	SWITCH, TOGGLE: MS 35058-21 (96906)	EA	1	*	*	*	*	*	*	*	*	9	26
P-F	5930-357-0485	SWITCH, ROTARY: 0762-5009 (82386)	EA	1	*	*	*	*	*	*	*	*	9	27
P-F	5930-357-0521	SWITCH, PUSHBUTTON: stop 0799-132 (82386)	EA	1	*	*	*	*	*	*	*	*	9	28
P-F	5950-936-8101	TRANSFORMER: 3945-5001 (82386)	EA	2	*	*	*	*	*	*	*	*	9	29
P-F	5930-548-8264	SWITCH, PUSH: OB-1 (04009)	EA	1	*	*	*	*	*	*	*	*	9	30
P-F	6625-466-1999	TIMER: 2139-5001 (82386)	EA	1	*	*	*	*	*	*	*	*	9	31
P-F	5925-936-8082	SWITCH, CIRCUIT BREAKER: 1922-5006 (82386)	EA	2	*	*	*	*	*	*	*	*	9	32

SECTION II. REPAIR PARTS

(1) SMR CODE	(2) FEDERAL STOCK NUMBER	(3) DESCRIPTION	(4) UNIT OF MEAS.	(5) QTY INC IN UNIT	(6) 30-DAY DS MAINT. ALLOWANCE			(7) 30-DAY GS MAINT. ALLOWANCE			(8) 1-YR ALW PER 100 EQUIP CNTGCY	(9) DEPOT MAINT ALW PER 100 EQUIP	(10) ILLUSTRATION	
					(a) 1-20	(b) 21-50	(c) 51-100	(a) 1-20	(b) 21-50	(c) 51-100			(a) FIGURE NO.	(b) ITEM NO.
		MAIN CONTROL PANEL ASSEMBLY (L.H.) —Continued												
P-F	5925-936-8096	CIRCUIT BREAKER: 5 amp 1922-026 (82386)	EA	1	*	*	*	*	*	*	*	*	9	33
P-F	5930-655-1514	SWITCH, TOGGLE: MS 35058-22 (96906)	EA	1	*	*	*	*	*	*	*	*	9	34
P-C	6210-479-2977	LIGHT, INDICATOR: 740-010 (82386)	EA	3	*	*	*	*	*	*	*	*	9	35
P-F		FUSE HOLDER: 1417 (82386)	EA	1	*	*	*	*	*	*	*	*	9	36
P-C	5920-465-8907	FUSE, 15 AMP: 739-022 (82386)	EA	1	*	*	*	*	*	*	*	*	9	37
P-C	6210-854-9195	LIGHT, INDICATOR: 740-020 (82386)	EA	4	*	*	*	*	*	*	*	*	9	38
P-F	6240-460-3952	LAMP, INDICATOR: 910-9 (82396)	EA	3	*	*	*	*	*	*	*	*	9	39
P-C	6240-460-3949	LAMP, INDICATOR: 910-030 (82386)	EA	1	*	*	*	*	*	*	*	*	9	40
P-F	5930-357-1108	SWITCH, TOGGLE: 689-218 (82386)	EA	1	*	*	*	*	*	*	*	*	9	41
		MAIN CONTROL PANEL ASSEMBLY (R.H.) C548-1407 (82386)												
P-F	5935-835-7450	CONNECTOR, RECEPTACLE, ELECTRICAL: MS 3102R22-7SC (96906)	EA	1	*	*	*	*	*	*	*	*	10	1
P-F	5935-357-1182	CONNECTOR, RECEPTACLE, ELECTRICAL: 4162-5014 (82386)	EA	1	*	*	*	*	*	*	*	*	10	2
P-F	5935-806-4588	CONNECTOR, RECEPTACLE, ELECTRICAL: MS 3102R16S10P (96906)	EA	1	*	*	*	*	*	*	*	*	10	3
P-F	5935-808-7458	CONNECTOR, RECEPTACLE, ELECTRICAL: MS 3102R16-10S (96906)	EA	1	*	*	*	*	*	*	*	*	10	4
P-F	5935-837-9892	CONNECTOR, RECEPTACLE, ELECTRICAL: MS 3102R32-158C (96906)	EA	1	*	*	*	*	*	*	*	*	10	5
P-F	5935-850-0233	CONNECTOR, RECEPTACLE, ELECTRICAL: MS 3102R32-15P (96906)	EA	1	*	*	*	*	*	*	*	*	10	6
X2-F	.....	KNOB, CARBON PILE: C548-5206 (82386)	EA	1	..	..	..	..	..	..	..	..	10	7
X2-F	.....	POST, BINDING: red 47D1368 (99664)	EA	1	..	..	..	..	..	..	..	..	10	8
X2-F	.....	POST, BINDING: black 47D1367 (99664)	EA	1	..	..	..	..	..	..	..	..	10	9

SECTION II. REPAIR PARTS

(1) SMR CODE	(2) FEDERAL STOCK NUMBER	(3) DESCRIPTION	(4) UNIT OF MEAS.	(5) QTY INC IN UNIT	(6) 30-DAY DS MAINT. ALLOWANCE			(7) 30-DAY GS MAINT. ALLOWANCE			(8) 1-YR ALW PER 100 EQUIP CNTGCY	(9) DEPOT MAINT ALW PER 100 EQUIP	(10) ILLUSTRATION	
					(a) 1-20	(b) 21-50	(c) 51-100	(a) 1-20	(b) 21-50	(c) 51-100			(a) FIGURE NO.	(b) ITEM NO.
		MAIN CONTROL PANEL ASSEMBLY (R.H.) —Continued												
P-F	5930-655-1514	SWITCH, TOGGLE: MS 35058-22 (96906)	EA	5	*	*	*	*	*	*	*	*	10	10
P-F	5930-357-0716	SWITCH, TOGGLE: 689-5001 (82386)	EA	2	*	*	*	*	*	*	*	*	10	11
P-F	5930-655-1575	SWITCH, TOGGLE: MS 35059-22 (96906)	EA	1	*	*	*	*	*	*	*	*	10	12
X2-F	.....	CARBON PILE: C548-5200 (82386)	EA	1	..	..	..	..	..	..	..	..	10	13
		ACCESSORY GROUP												
P-O	4910-253-5872	SUPPORT ASSEMBLY: C548-2202 (82386) composed of:	EA	1	*	*	*	*	*	*	*	*	11	1
P-O	4910-254-6338	ADAPTER, REGULATOR MOUNTING: C548-2232 (82386)	EA	1	*	*	*	*	*	*	*	*	11	2
P-O	4910-254-6330	BRACKET, SUPPORT ASSEMBLY: C548-2203 (82386)	EA	1	*	*	*	*	*	*	*	*	11	3
P-O	5975-410-5993	STRAP, TIE DOWN, ELECTRICAL COMPONENTS: C548-2204 (82386)	EA	1	*	*	*	*	*	*	*	*	11	4
P-O	5315-843-7437	PIN, PIVOT: regulator support 5688-5002 (82386)	EA	2	*	*	*	*	*	*	*	*	11	5
P-O	5305-956-7184	THUMBSCREW, WINEHEAD: ¼-20 X 0.750 in. FL PT 10640971-1 (18876)	EA	2	*	*	*	*	*	*	*	*	11	6
P-O	4910-253-5870	BAR, CLAMPING, RAIL: C548-2207 (82386)	EA	1	*	*	*	*	*	*	*	*	11	7
P-O	4910-253-5874	BRACKET, SUPPORT: C548-2205 (82386)	EA	1	*	*	*	*	*	*	*	*	11	8
P-O	4910-254-6321	BASE, COMPONENT MOUNTING: C548-2206 (82386)	EA	1	*	*	*	*	*	*	*	*	11	9
P-O	4910-789-0479	ADAPTER, MOUNTING FLANGE: 2-764 (82386)	EA	1	*	*	*	*	*	*	*	*	11	10
P-O	4910-254-6327	GUARD, BELT: C548-2226 (82386)	EA	1	*	*	*	*	*	*	*	*	11	11
P-O	4910-254-6329	SPACER, CRADLE SUPPORT: C548-2168 (82386)	EA	1	*	*	*	*	*	*	*	*	11	12
P-O	4910-253-5873	BRACKET, CRADLE SUPPORT: C548-2163 (82386)	EA	1	*	*	*	*	*	*	*	*	11	13
P-O	4910-254-6332	BRACKET, RECTIFIER MOUNTING: C548-2249 (82386)	EA	1	*	*	*	*	*	*	*	*	11	14

SECTION II. REPAIR PARTS

(1) SMR CODE	(2) FEDERAL STOCK NUMBER	(3) DESCRIPTION	(4) UNIT OF MEAS.	(5) QTY INC IN UNIT	(6) 30-DAY DS MAINT. ALLOWANCE			(7) 30-DAY GS MAINT. ALLOWANCE			(8) 1-YR ALW PER 100 EQUIP CNTGCY	(9) DEPOT MAINT ALW PER 100 EQUIP	(10) ILLUSTRATION	
					(a) 1-20	(b) 21-50	(c) 51-100	(a) 1-20	(b) 21-50	(c) 51-100			(a) FIGURE NO.	(b) ITEM NO.
		ACCESSORY GROUP—Continued												
P-O	3030-834-5928	BELT, V, MATCHED SET: plain type, B cross section B33 (72781)	SE	1	*	*	*	*	*	*	*	*	11	15
P-O	3030-834-5926	BELT, V, MATCHED SET: plain type, A cross section A33 (72781)	SE	1	*	*	*	*	*	*	*	*	11	16
P-O	3030-834-5935	BELT, V, MATCHED SET: plain type, 0 cross section 3L350 (72781)	SE	1	*	*	*	*	*	*	*	*	11	17
P-O	4910-253-5867	ADAPTER, FLANGE: C548-2244 (82385)	EA	1	*	*	*	*	*	*	*	*	11	18
P-O	4910-253-5869	ANGLE, MOUNTING: C548-2141 (82386)	EA	1	*	*	*	*	*	*	*	*	11	19
P-O	4910-254-6323	CHANNEL, MOUNTING: C548-2169 (82386)	EA	1	*	*	*	*	*	*	*	*	11	20
P-O	4910-254-6325	EXTENSION, BRACKET: C548-1235 (82386)	EA	1	*	*	*	*	*	*	*	*	11	21
P-O	4910-254-6331	FLANGE, GENERATOR DRIVE: C548-2243 (82386)	EA	1	*	*	*	*	*	*	*	*	11	22
P-O	5340-900-5219	RING, RETAINING: S, 1.272 inch I.D., 0.050 inch thk MS 166-30-1137 (96906)	EA	1	*	*	*	*	*	*	*	*	11	23
P-O	5310-177-7697	WASHER, FLAT: C548-2160 (82386)	EA	1	*	*	*	*	*	*	*	*	11	24
P-O	5315-781-2025	KEY, MACHINE: 0.375 X 0.375, 3 inches lg MS20068-253 (96906)	EA	1	*	*	*	*	*	*	*	*	11	25
P-O	5315-781-2027	KEY, MACHINE: 0.375 X 0.375, 1.500 inch lg MS 20068-275 (96906)	EA	1	*	*	*	*	*	*	*	*	11	26
P-O	4910-254-6326	BATTERY BLOCK, HOLD-DOWN: C548-1820 (82386)	EA	4	*	*	*	*	*	*	*	*	11	27
P-O	4910-254-6336	BRACKET, PIVOT SUPPORT: C548-2149 (82386)	EA	1	*	*	*	*	*	*	*	*	11	28
P-O	3020-253-5879	PULLEY, GROOVE: C548-2162 (82386)	EA	1	*	*	*	*	*	*	*	*	11	29
P-O	3020-253-5878	PULLEY, GROOVE: C548-2161 (82386)	EA	1	*	*	*	*	*	*	*	*	11	30
P-O	4910-254-6322	CRADLE, MOUNTING: generator / alternator C548-2170 (82386)	EA	1	*	*	*	*	*	*	*	*	11	31
P-O	4910-254-6335	ADAPTER, FLANGE: C548-2242 (82386)	EA	1	*	*	*	*	*	*	*	*	11	32
P-O	4910-254-6341	PULLEY OUTPUT SHAFT ASSEMBLY: C548-2156 (82386)	EA	1	*	*	*	*	*	*	*	*	11	33

SECTION II. REPAIR PARTS

(1) SMR CODE	(2) FEDERAL STOCK NUMBER	(3) DESCRIPTION	(4) UNIT OF MEAS.	(5) QTY INC IN UNIT	(6) 2-DAY DS MAINT. ALLOWANCE (a) 1-20	(b) 21-50	(c) 51-100	(7) 30-DAY GS MAINT. ALLOWANCE (a) 1-20	(b) 21-50	(c) 51-100	(8) 1-YR ALW PER 100 EQUIP CNTGCY	(9) DEPOT MAINT ALW PER 100 EQUIP	(10) ILLUSTRATION (a) FIGURE NO.	(b) ITEM NO.
		ACCESSORY GROUP—Continued												
P-O	4910-253-5868	COUPLING, SHAFT: 3046-5001-01 (82386)	EA	1	*	*	*	*	*	*	*	*	11	34
P-O	4910-254-6340	ADAPTER, SPLINE: C548-2246 (82386)	EA	1	*	*	*	*	*	*	*	*	11	35
P-F	4910-786-4118	ADAPTER, SPLINE: ½ PD male to no. 8 PD female spine 140-008 (82386)	EA	1	*	*	*	*	*	*	*	*	11	36
P-O	5965-470-9521	HEADSET, ELECTRICAL: 70-06 (81812)	EA	1	*	*	*	*	*	*	*	*	11	37
P-O	4910-253-5877	SHAFT, PIVOT: C548-2148 (82386)	EA	1	*	*	*	*	*	*	*	*	11	38
P-O	5307-410-4935	STUD, SHOULDERED: C548-2155 (82386)	EA	6	*	*	*	*	*	*	*	*	11	39
P-O	4910-254-6324	ARM, PIVOT: C548-2147 (82386)	EA	1	*	*	*	*	*	*	*	*	11	40
P-C	5920-465-8906	FUSE: cartridge, 10 amp, ferrule type, 250 V 739-014 (82386)	EA	1	*	*	*	*	*	*	*	*	11	41
P-F	5920-783-7859	FUSE, CARTRIDGE: glass body 15 amp, 125 V, DC, normal instantaneous, ferrule type 414015 (75915)	EA	1	*	*	*	*	*	*	*	*	11	42
P-F	6680-834-5941	TACHOMETER, HAND: reed type 31627 (99664)	EA	1	*	*	*	*	*	*	*	*	11	43
P-O	4910-254-6320	LINK, BUS BAR: C548-5700 (82386)	EA	2	*	*	*	*	*	*	*	*	11	44
P-O	4910-254-6337	BAR, TORQUE ARM: C548-2195 (82386)	EA	1	*	*	*	*	*	*	*	*	11	45
P-O	4910-254-6333	SUPPORT, STARTER MOUNTING: C548-2199 (82386)	EA	1	*	*	*	*	*	*	*	*	11	46
P-O	4910-253-5876	LOCK, TORQUE ASSEMBLY: C548-2177 (82386)	EA	1	*	*	*	*	*	*	*	*	11	47
P-O	4910-253-5871	JAW, CLUTCH HOUSING ASSEMBLY: C548-2188 (82386)	EA	1	*	*	*	*	*	*	*	*	11	48
P-C	6670-440-0318	SCALE, SPRING: 0001-5006 (82386)	EA	1	*	*	*	*	*	*	*	*	11	49
P-C	6670-440-0317	SCALE, SPRING: 0001-5007 (82386)	EA	1	*	*	*	*	*	*	*	*	11	50
P-O	4910-254-6328	FLANGE, UNIVERSAL MOUNTING: C548-2198 (82386)	EA	1	*	*	*	*	*	*	*	*	11	51
X2-F	.....	TORQUE ARM CLAMP ASSEMBLY: pinion driven C548-2194 (82386)	EA	1	..	..	..	..	..	..	..	..	11	52

SECTION II. REPAIR PARTS

(1) SMR CODE	(2) FEDERAL STOCK NUMBER	(3) DESCRIPTION	(4) UNIT OF MEAS.	(5) QTY INC IN UNIT	(6) 30-DAY DS MAINT. ALLOWANCE			(7) 30-DAY GS MAINT. ALLOWANCE			(8) 1-YR ALW PER 100 EQUIP CNTGCY	(9) DEPOT MAINT ALW PER 100 EQUIP	(10) ILLUSTRATION	
					(a) 1-20	(b) 21-50	(c) 51-100	(a) 1-20	(b) 21-50	(c) 51-100			(a) FIGURE NO.	(b) ITEM NO.
		CABLE ASSEMBLY GROUP												
P-O	6140-239-5972	LEAD, STORAGE BATTERY: C548-4101-01 (82386)	EA	1	*	*	*	*	*	*	*	*	12	1
P-O	6140-239-5974	LEAD, STORAGE BATTERY: C548-4101-02 (82386)	EA	1	*	*	*	*	*	*	*	*	12	2
P-O	6140-239-5977	LEAD, STORAGE BATTERY: C548-4101-03 (82386)	EA	1	*	*	*	*	*	*	*	*	12	3
P-O	6140-239-5978	LEAD, STORAGE BATTERY: C548-4101-04 (82386)	EA	1	*	*	*	*	*	*	*	*	12	4
P-O	6140-239-5980	LEAD, STORAGE BATTERY: C548-4101-05 (82386)	EA	1	*	*	*	*	*	*	*	*	12	5
P-O	6140-239-5981	LEAD, STORAGE BATTERY: C548-4101-06 (82386)	EA	1	*	*	*	*	*	*	*	*	12	6
P-O	6140-239-5982	LEAD, STORAGE BATTERY: C548-4101-07 (82386)	EA	1	*	*	*	*	*	*	*	*	12	7
P-F	5340-549-6581	TERMINAL LUG: battery, clamp type, MS 75004-1 (96906)	EA	1	*	*	*	*	*	*	*	*	12	8
P-F	5340-549-6583	TERMINAL LUG: battery, clamp type, neg, w/bolt and nut MS 75004-2 (96906)	EA	1	*	*	*	*	*	*	*	*	12	9
P-O	5995-177-2345	CABLE, SPECIAL PURPOSE, ELECTRICAL: C548-4102 (82386)	EA	1	*	*	*	*	*	*	*	*	12	10
P-O	6625-489-8424	LEAD, TEST: w/lugs C548-4100-11 (82386)	EA	1	*	*	*	*	*	*	*	*	12	11
P-O	5995-134-6677	CABLE, SPECIAL PURPOSE, ELECTRICAL: C548-4109 (82386)	EA	2	*	*	*	*	*	*	*	*	12	12
P-O	5995-177-2344	CABLE, SPECIAL PURPOSE, ELECTRICAL: C548-4103 (82386)	EA	1	*	*	*	*	*	*	*	*	12	13
P-O	5995-177-2342	CABLE, SPECIAL PURPOSE, ELECTRICAL: C548-4104 (82386)	EA	1	*	*	*	*	*	*	*	*	12	14
P-O	5995-177-2341	CABLE, SPECIAL PURPOSE, ELECTRICAL: C548-4105 (82386)	EA	1	*	*	*	*	*	*	*	*	12	15
P-O	5995-134-6685	CABLE, SPECIAL PURPOSE, ELECTRICAL: C548-4110 (82386)	EA	2	*	*	*	*	*	*	*	*	12	16
P-F	4910-231-0301	CABLE ASSEMBLY, SPECIAL PURPOSE, ELECTRICAL: blower motor C548-4113 (82386)	EA	1	*	*	*	*	*	*	*	*	12	17
P-O	5995-134-6676	CABLE, SPECIAL PURPOSE, ELECTRICAL: C548-4108 (82386)	EA	2	*	*	*	*	*	*	*	*	12	18
P-O	6625-489-8425	LEAD, TEST: w/lugs C548-4100-10 (82386)	EA	1	*	*	*	*	*	*	*	*	12	19

SECTION II. REPAIR PARTS

(1) SMR CODE	(2) FEDERAL STOCK NUMBER	(3) DESCRIPTION	(4) UNIT OF MEAS.	(5) QTY INC IN UNIT	(6) 30-DAY DS MAINT. ALLOWANCE (a) 1-20	(b) 21-50	(c) 51-100	(7) 30-DAY GS MAINT. ALLOWANCE (a) 1-20	(b) 21-50	(c) 51-100	(8) 1-YR ALW PER 100 EQUIP CNTGCY	(9) DEPOT MAINT ALW PER 100 EQUIP	(10) ILLUSTRATION (a) FIGURE NO.	(b) ITEM NO.
		CABLE ASSEMBLY GROUP —Continued												
P-O	6625-491-0585	LEAD, TEST: w/lugs C548-4100-04 (82386)	EA	1	*	*	*	*	*	*	*	*	12	20
P-O	6625-491-0582	LEAD, TEST: w/lugs C548-4100-09 (82386)	EA	1	*	*	*	*	*	*	*	*	12	21
P-O	6625-491-0591	LEAD, TEST: w/lugs C548-4100-16 (82386)	EA	1	*	*	*	*	*	*	*	*	12	22
P-O	5995-134-6686	CABLE, SPECIAL PURPOSE, ELECTRICAL: C548-4114 (82386)	EA	1	*	*	*	*	*	*	*	*	12	23
P-O	6625-492-6138	LEAD, TEST: w/lugs C548-4112-01 (82386)	EA	1	*	*	*	*	*	*	*	*	12	24
P-O	6625-400-7683	LEAD, TEST: C548-4112-02 (82386)	EA	1	*	*	*	*	*	*	*	*	12	25
P-O	6625-491-0586	LEAD, TEST: w/lugs C548-4100-03 (82386)	EA	1	*	*	*	*	*	*	*	*	12	26
P-O	6625-491-0583	LEAD, TEST: w/lugs C548-4100-08 (82386)	EA	1	*	*	*	*	*	*	*	*	12	27
P-O	6625-491-0610	LEAD, TEST: w/lugs C548-4100-18 (82386)	EA	1	*	*	*	*	*	*	*	*	12	28
P-O	6625-489-8423	LEAD, TEST: w/lugs C548-4100-12 (82386)	EA	1	*	*	*	*	*	*	*	*	12	29
P-O	4910-254-6319	TEST LEAD, REGULATOR: C548-4115 (82386)	EA	1	*	*	*	*	*	*	*	*	12	30
P-O	6625-491-0584	LEAD, TEST: C548-4100-07 (82386)	EA	1	*	*	*	*	*	*	*	*	12	31
P-O	6625-496-8542	LEAD, TEST: w/lugs C548-4100-19 (82386)	EA	1	*	*	*	*	*	*	*	*	12	32
P-O	6625-491-0581	LEAD, TEST: w/lugs C548-4100-13 (82386)	EA	1	*	*	*	*	*	*	*	*	12	33
P-O	5995-134-6687	CABLE, SPECIAL PURPOSE, ELECTRICAL: C548-4106 (82386)	EA	1	*	*	*	*	*	*	*	*	12	34
P-O	5995-134-6675	CABLE, SPECIAL PURPOSE, ELECTRICAL: C548-4107 (82386)	EA	1	*	*	*	*	*	*	*	*	12	35
P-O	6625-489-8422	LEAD, TEST: C548-4100-14 (82386)	EA	1	*	*	*	*	*	*	*	*	12	36
P-O	6625-489-8421	LEAD, TEST: C548-4100-15 (82386)	EA	1	*	*	*	*	*	*	*	*	12	37
P-O	6625-491-0588	LEAD, TEST: w/lugs C548-4100-01 (82386)	EA	1	*	*	*	*	*	*	*	*	12	38
P-O	6625-491-0587	LEAD, TEST: w/lugs C548-4100-02 (82386)	EA	1	*	*	*	*	*	*	*	*	12	39
P-O	6625-491-0592	LEAD, TEST: w/lugs C548-4100-17 (82386)	EA	1	*	*	*	*	*	*	*	*	12	40

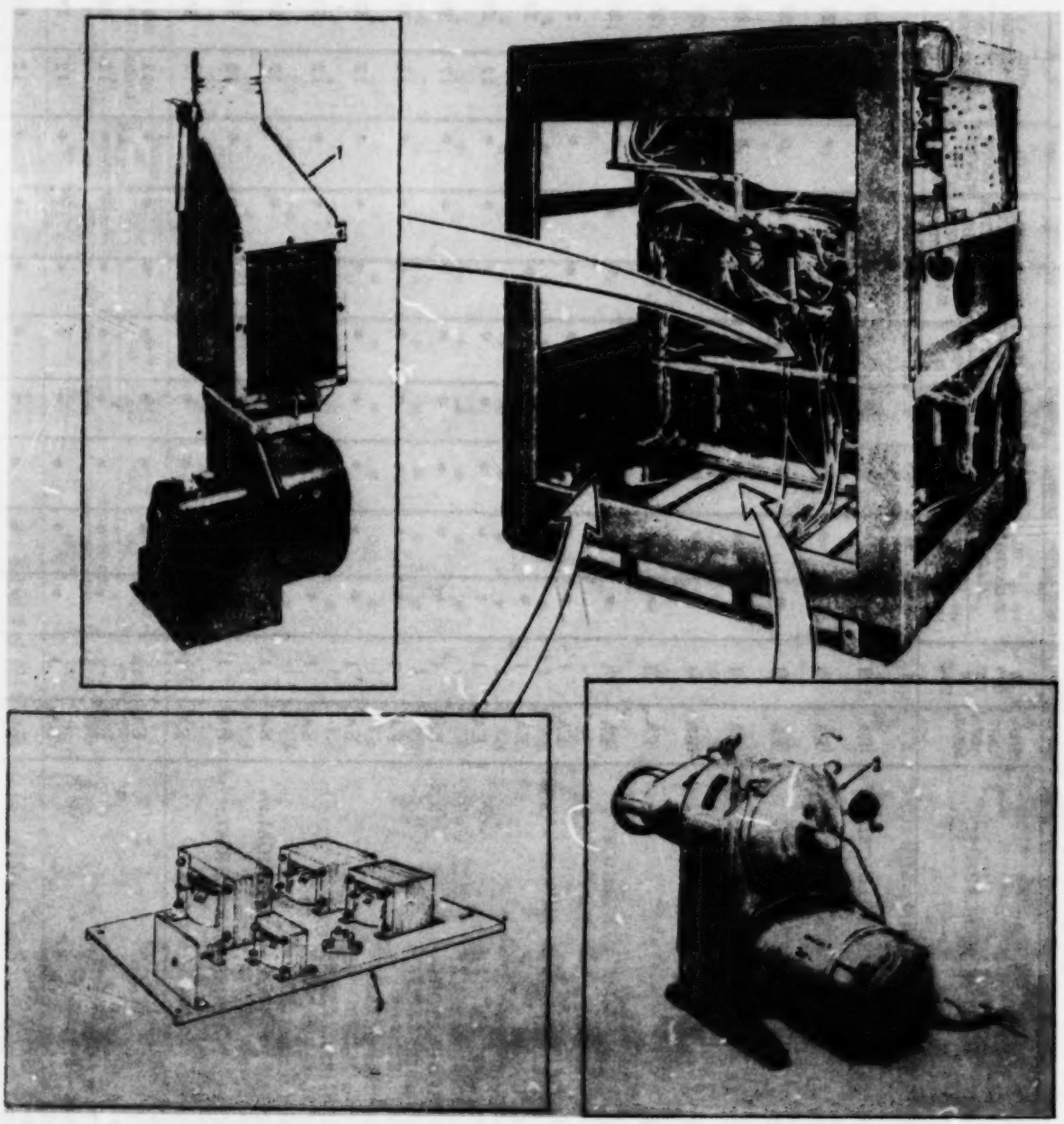

WE 38548

Figure 1. JGT-9 Test Stand---partially exploded view. (Sheet 1 of 2)

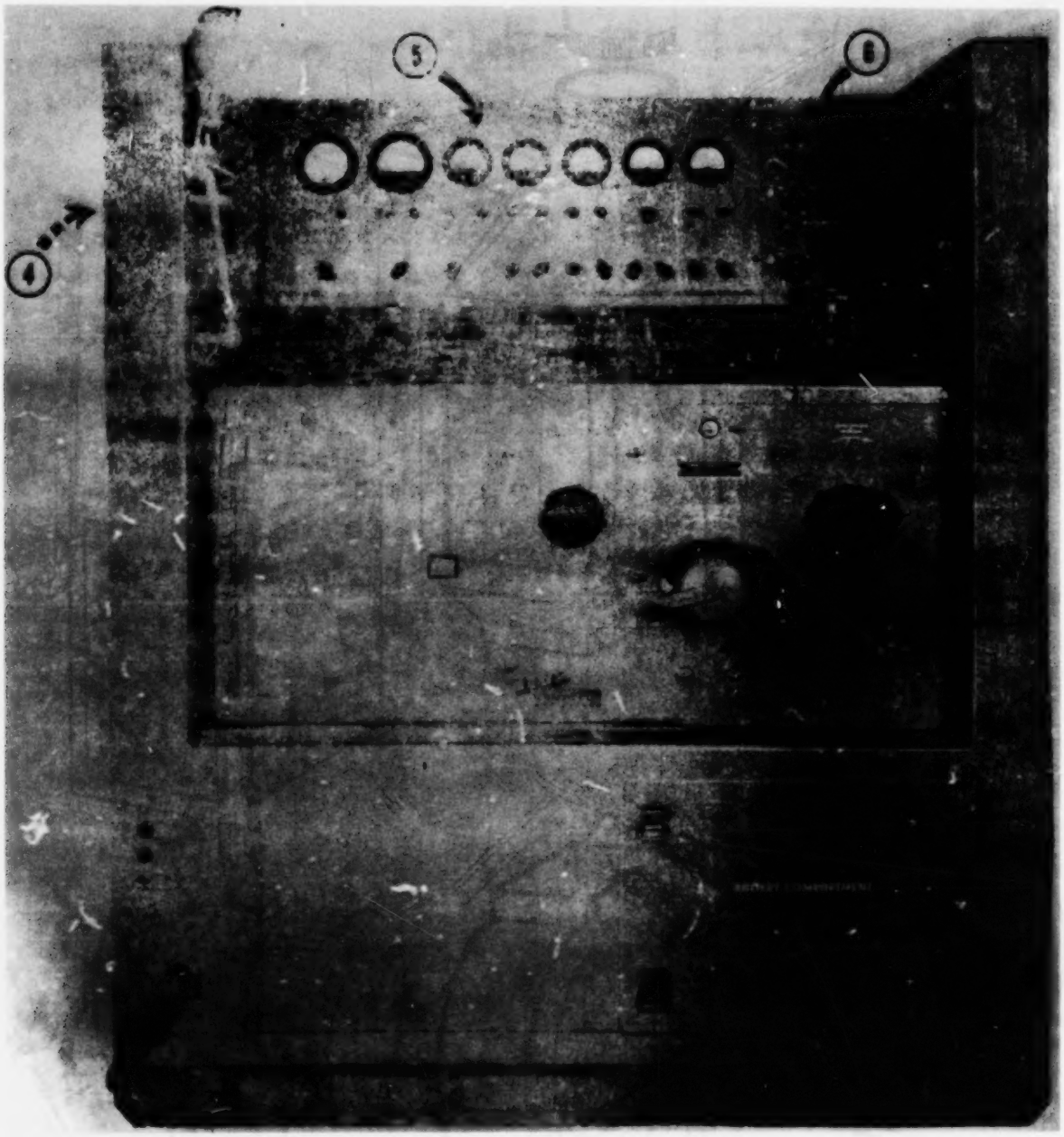

WE 38549

Figure 1. IGT 9 Test Console, partially exploded view. (Sheet 2 of 2)

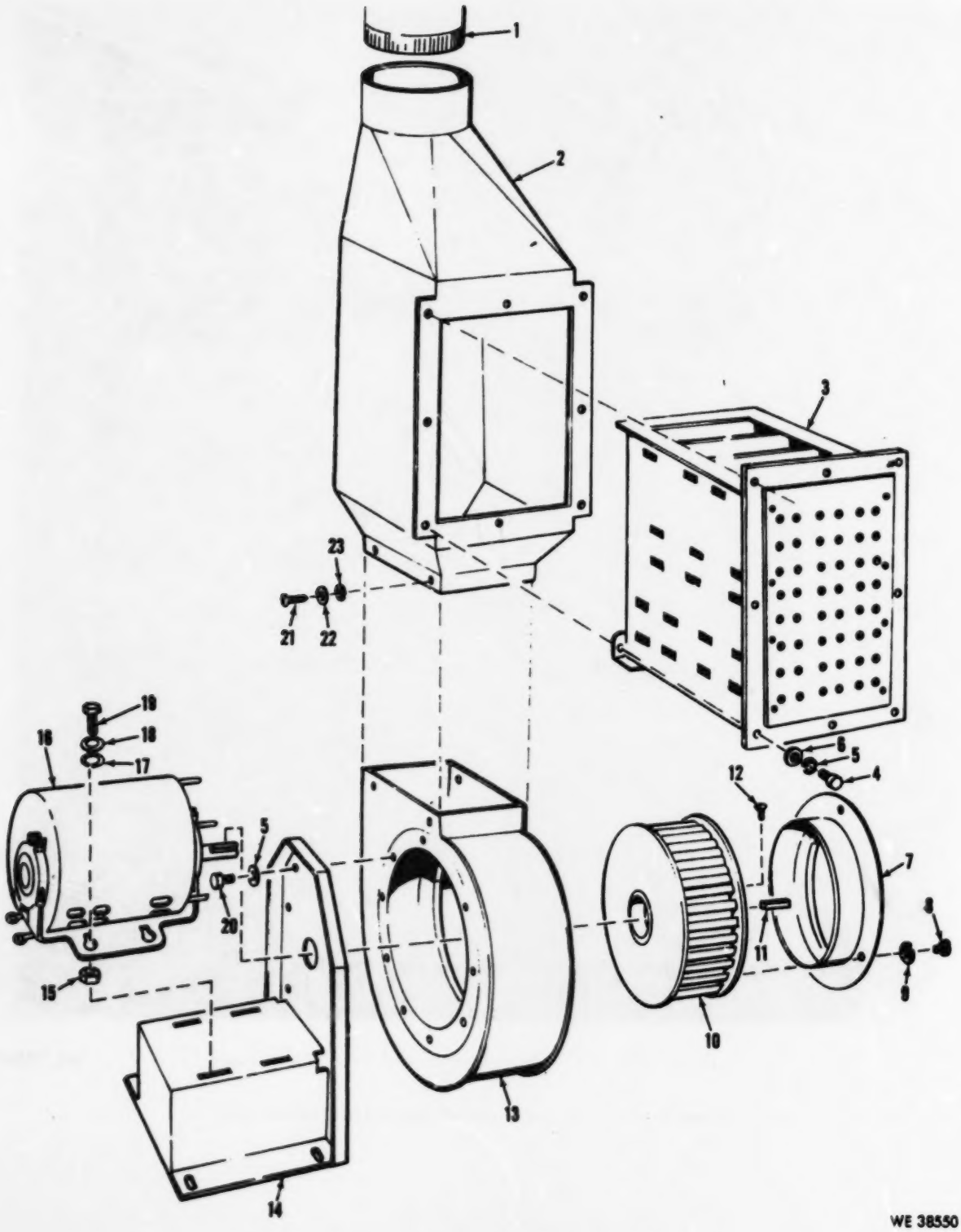

Figure 2. Load Bank and Blower Motor Group—exploded view.

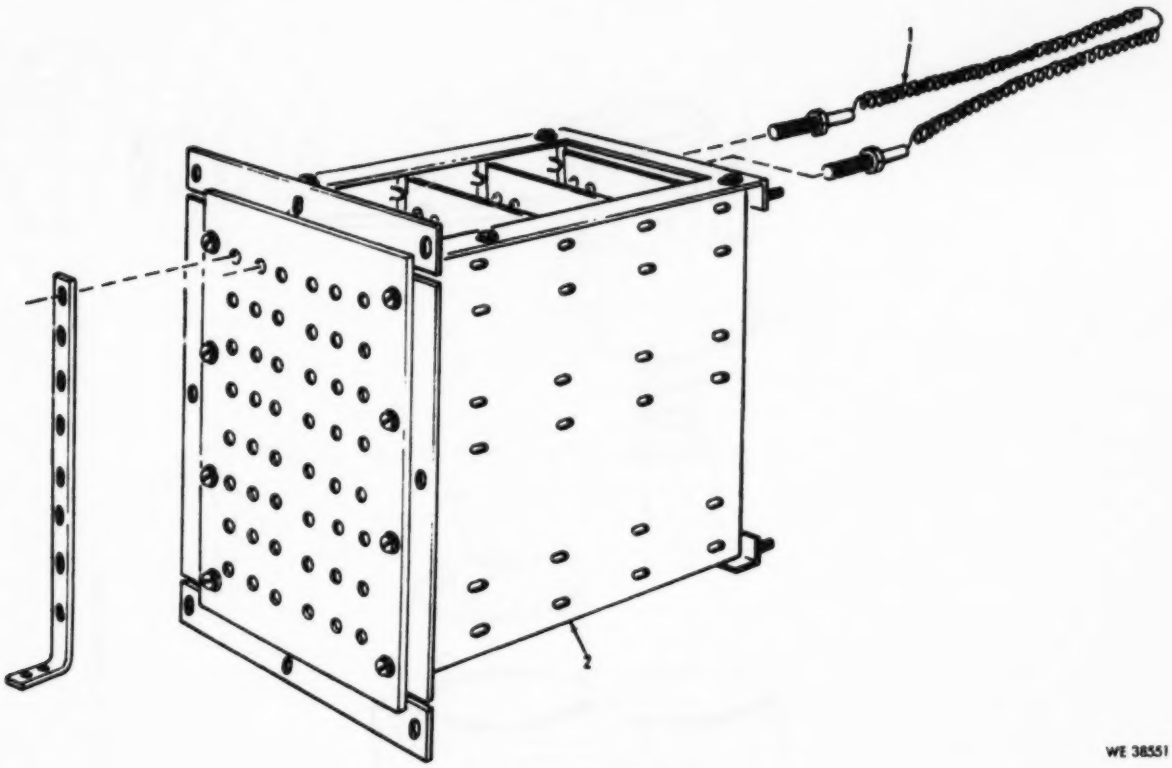

Figure 3. Electrical Dummy Load—exploded view.

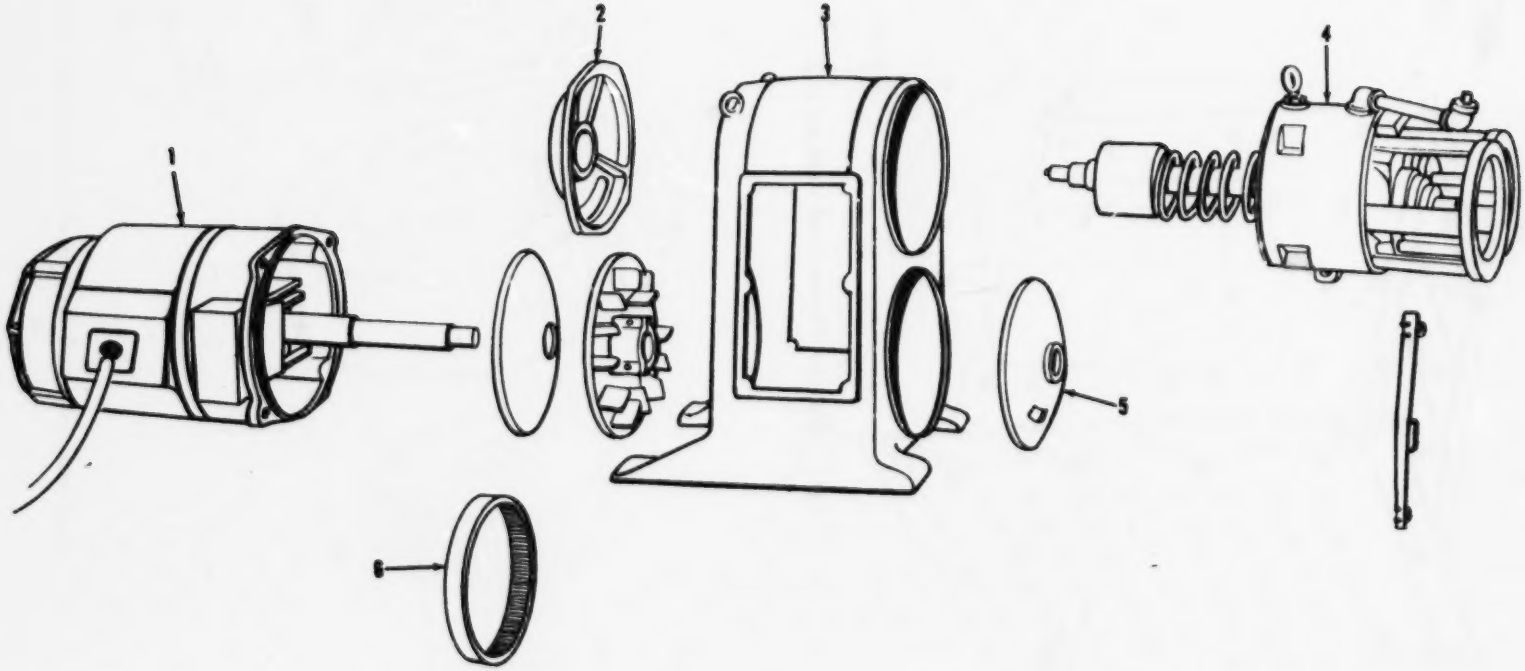

WE 38552

Figure 4. Motor Varidrive Assembly—exploded view.

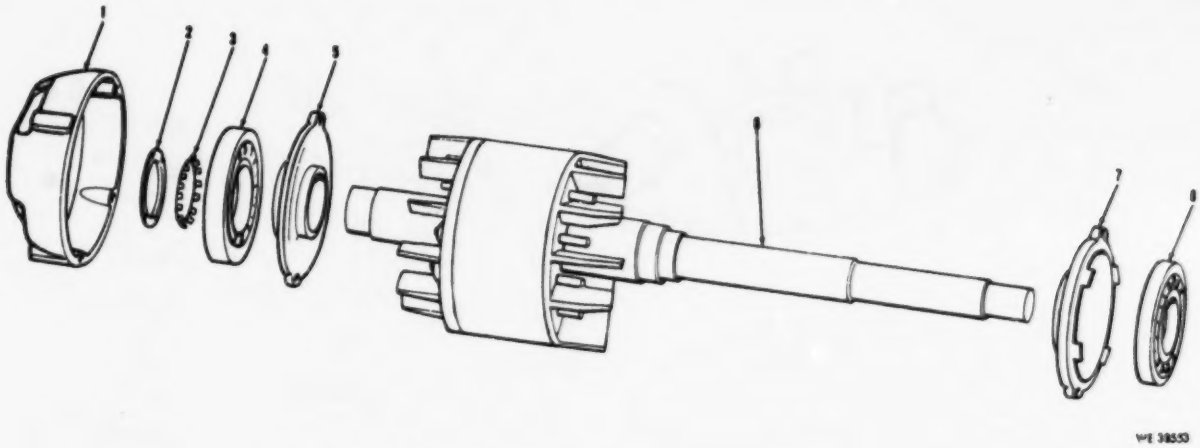

Figure 5. Varidrive Motor Assembly—exploded view. (Sheet 1 of 2)

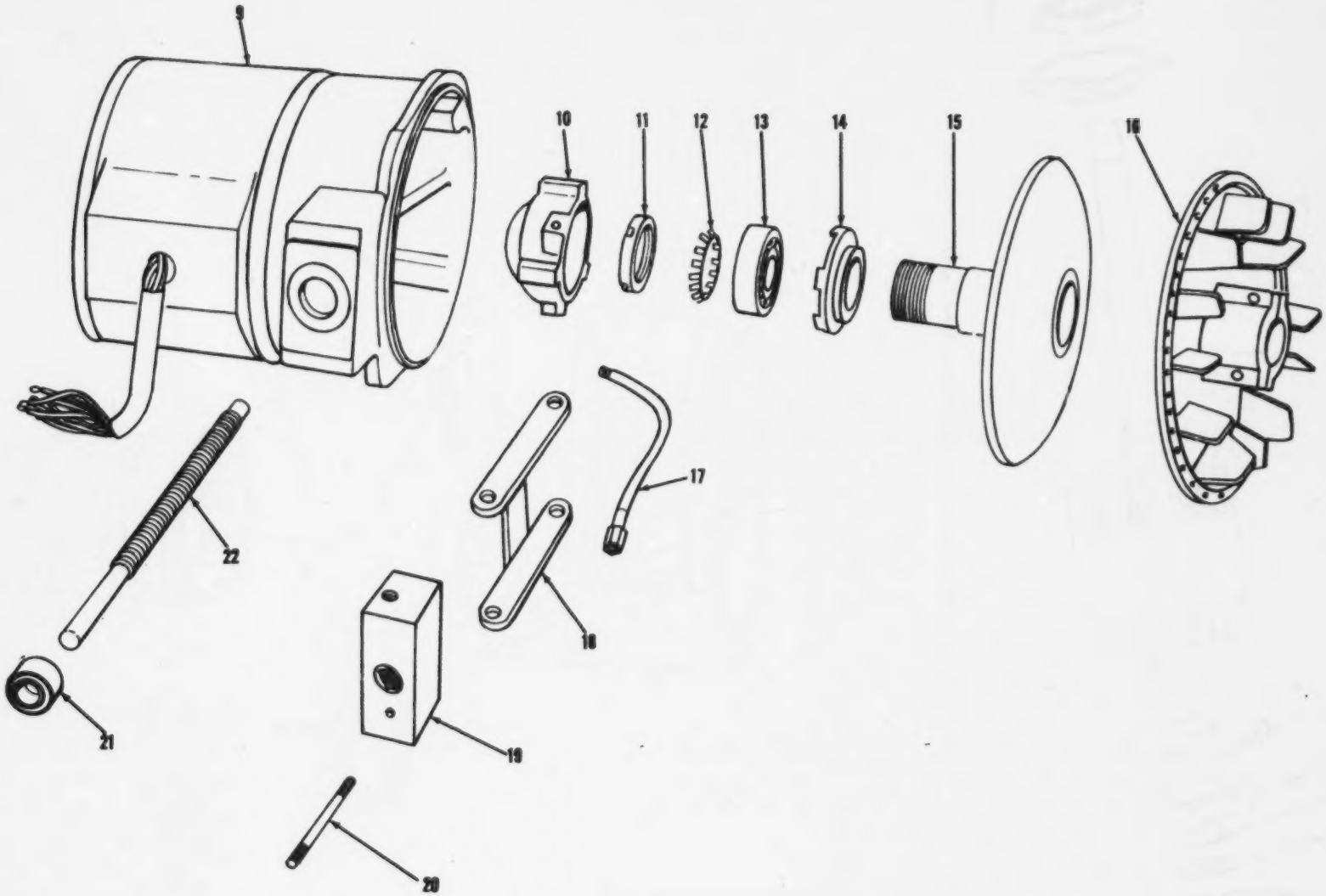

WE 38554

Figure 5. Varidrive Motor Assembly—exploded view. (Sheet 2 of 2)

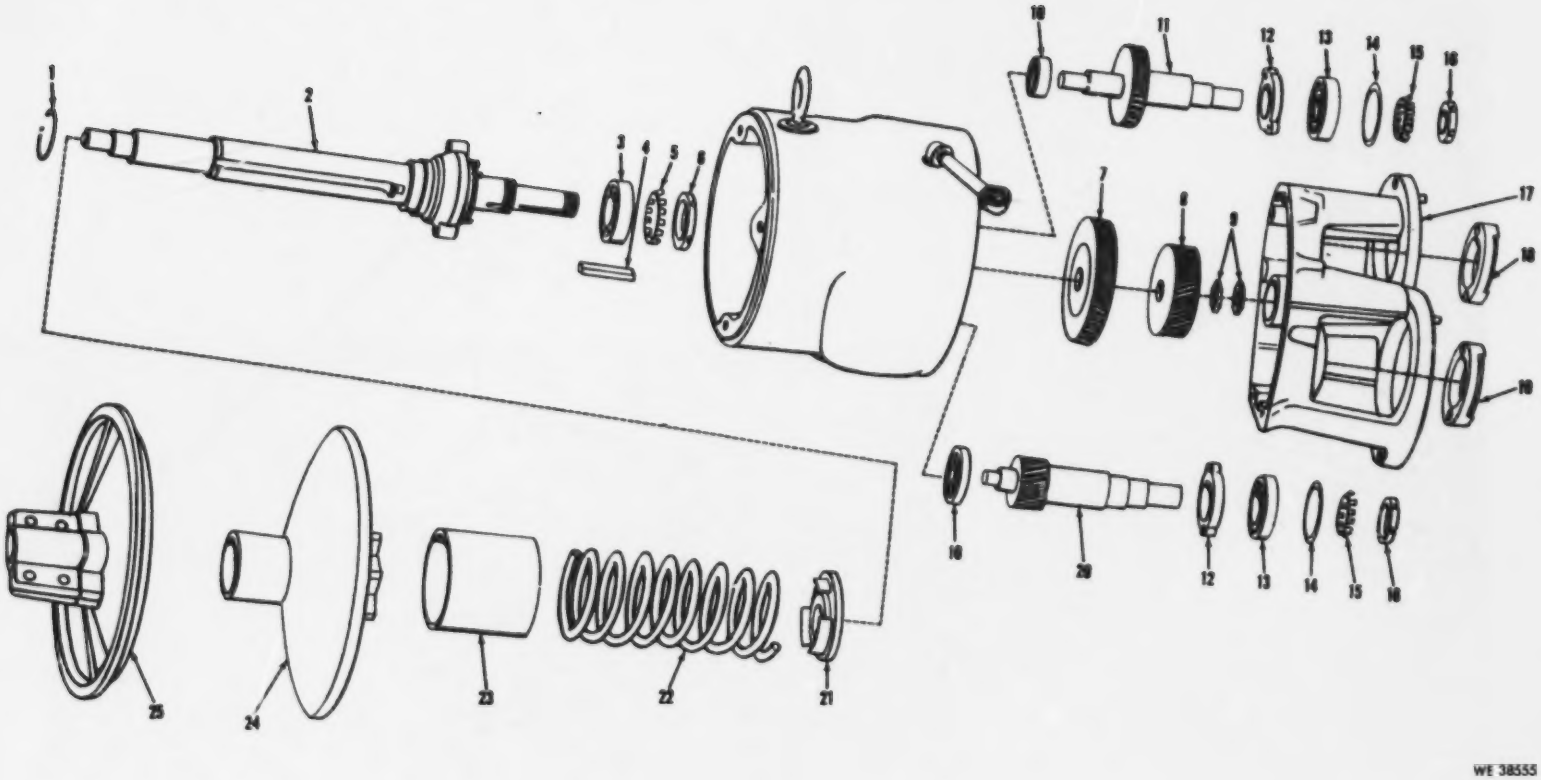

Figure 6. Reduction Gear Assembly—exploded view.

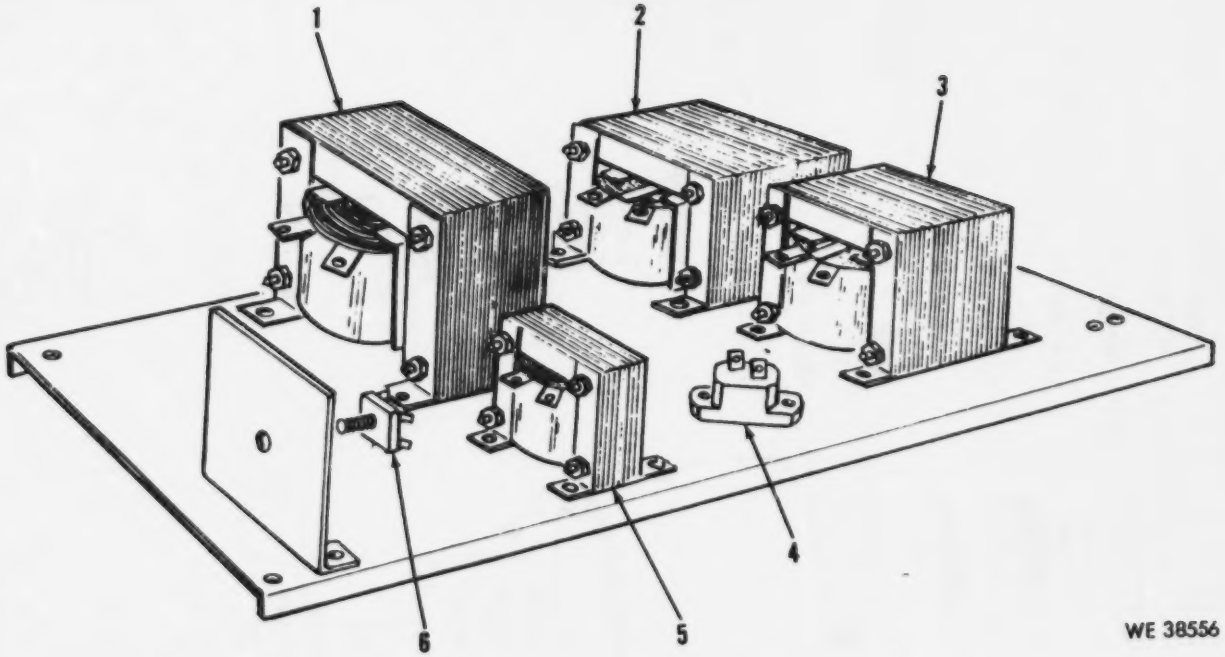

Figure 7. Transformer Panel Assembly.

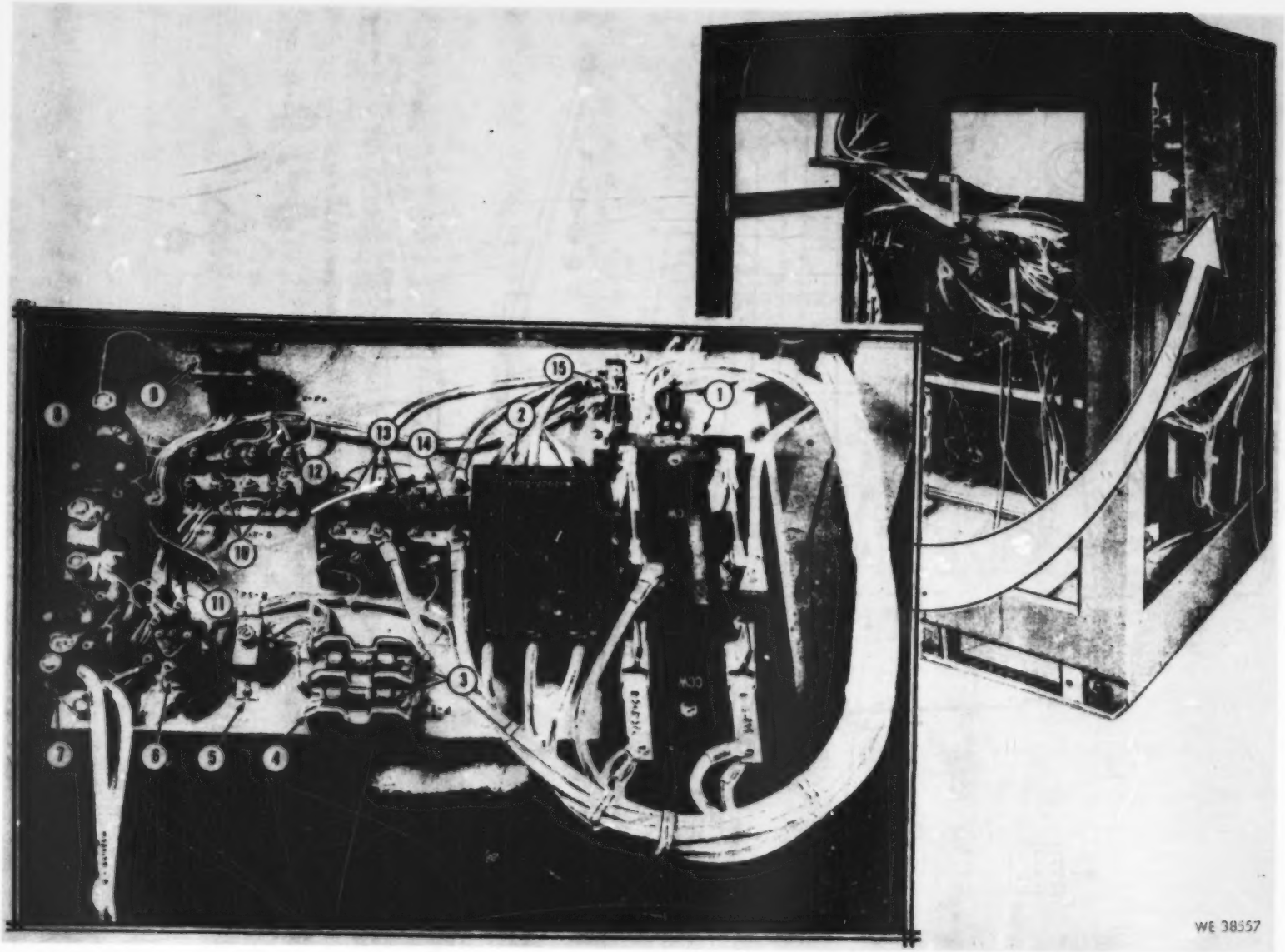

Figure 8. Electrical Components Panel.

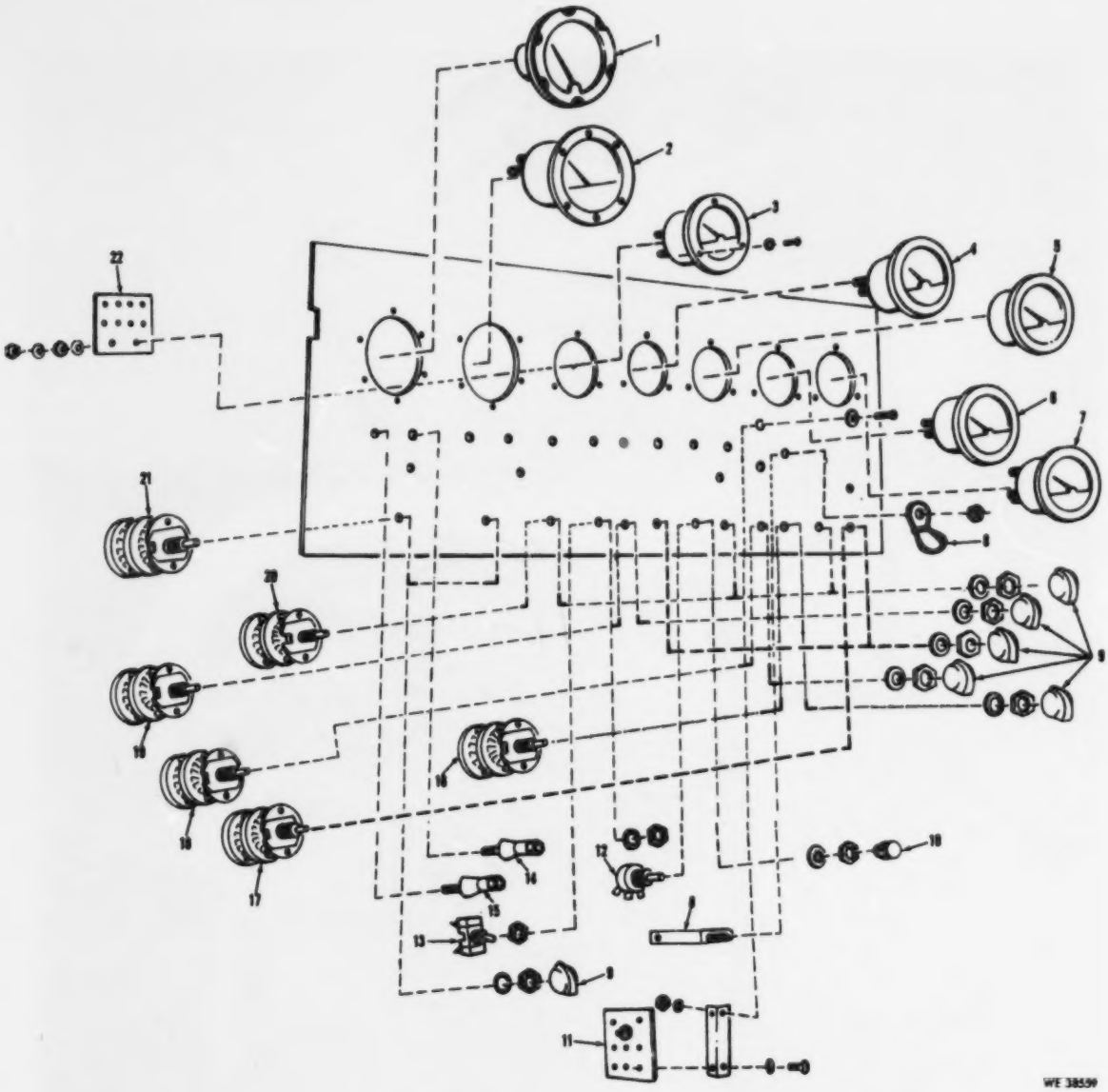

Figure 9. Main Control Panel Assembly (L.H.)—exploded view. (Sheet 1 of 2)

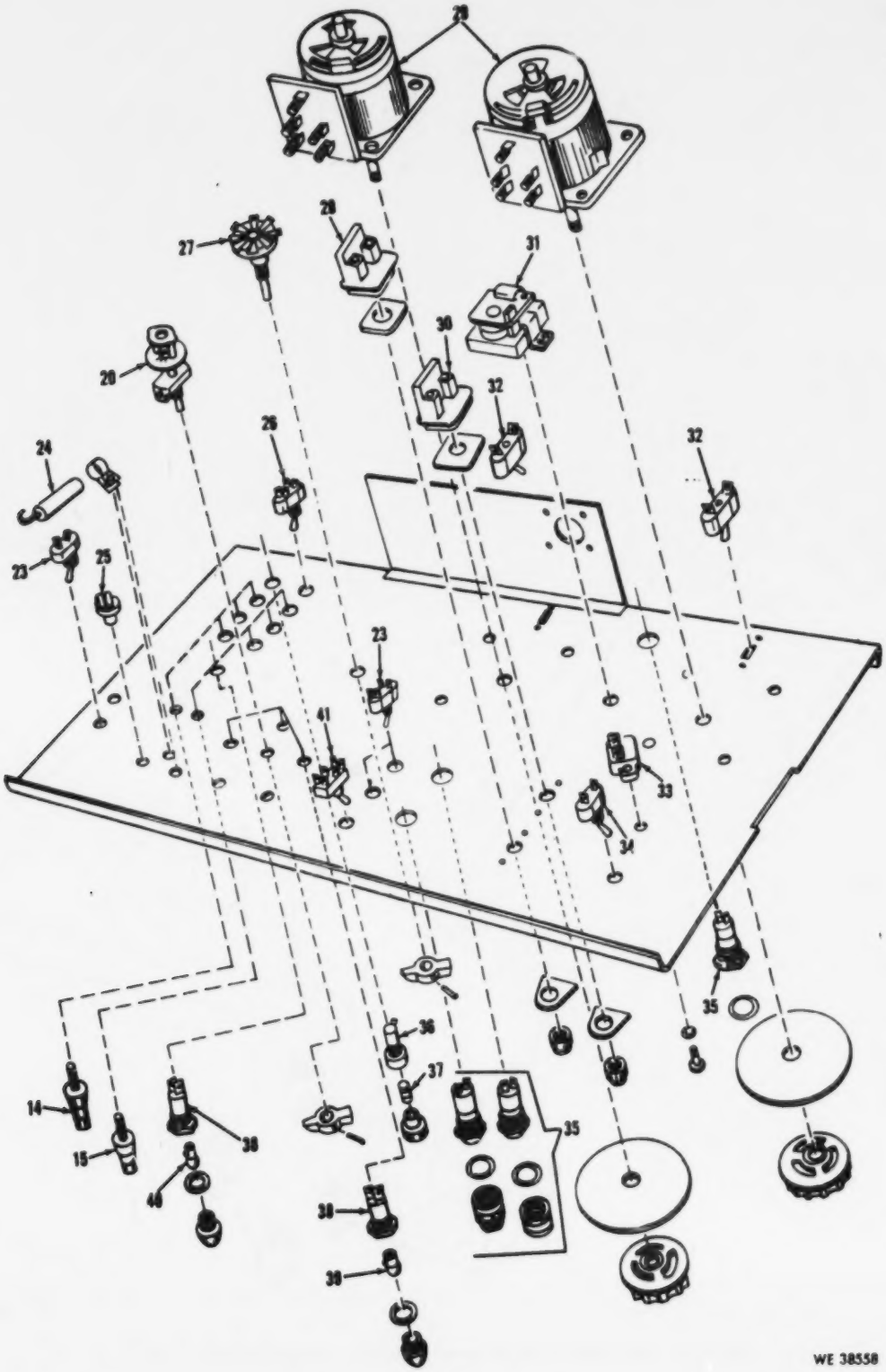

Figure 9. Main Control Panel Assembly (L.H.)— exploded view. (Sheet 2 of 2)

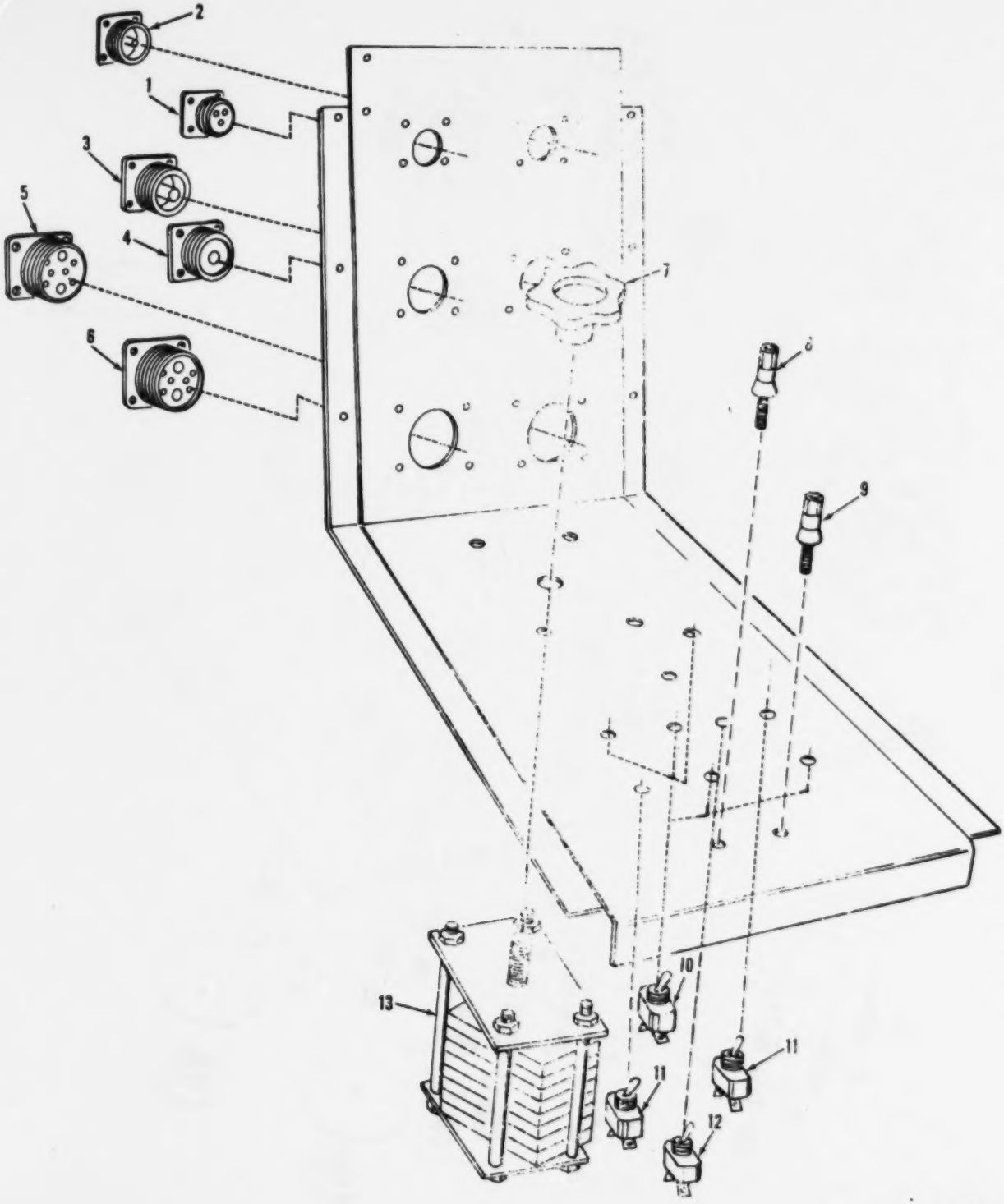

Figure 10. Main Control Panel Assembly (R.H.)— exploded view.

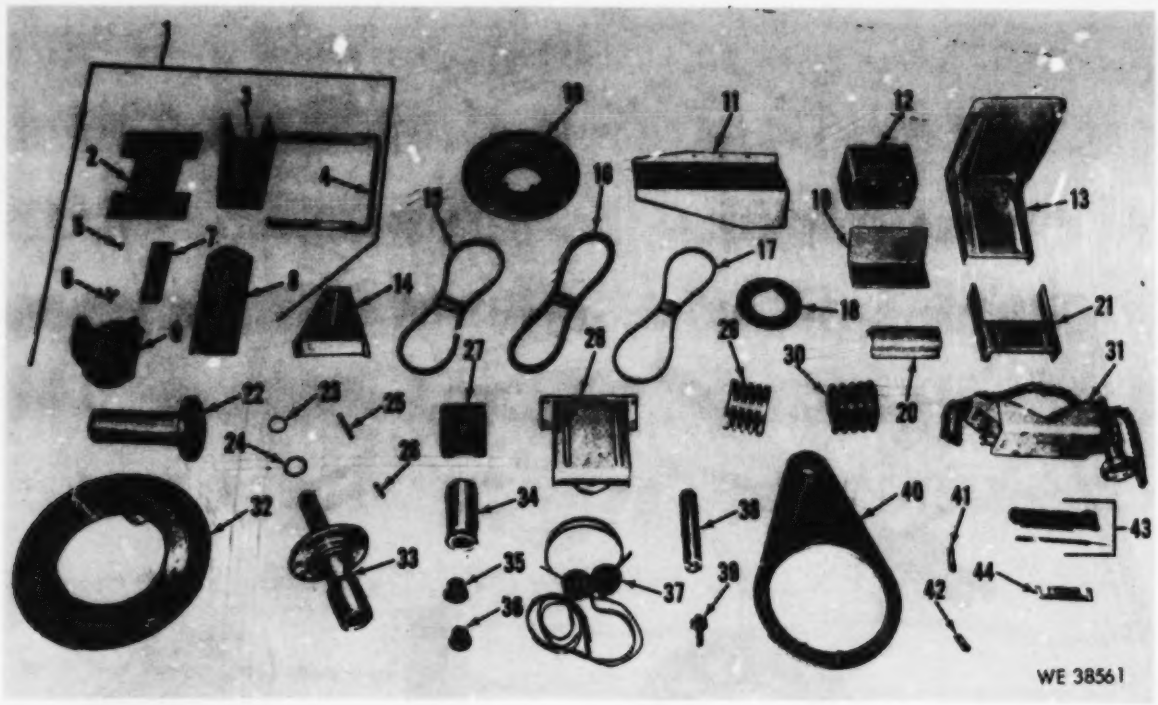

Figure 11. Accessory Group (Sheet 1 of 2)

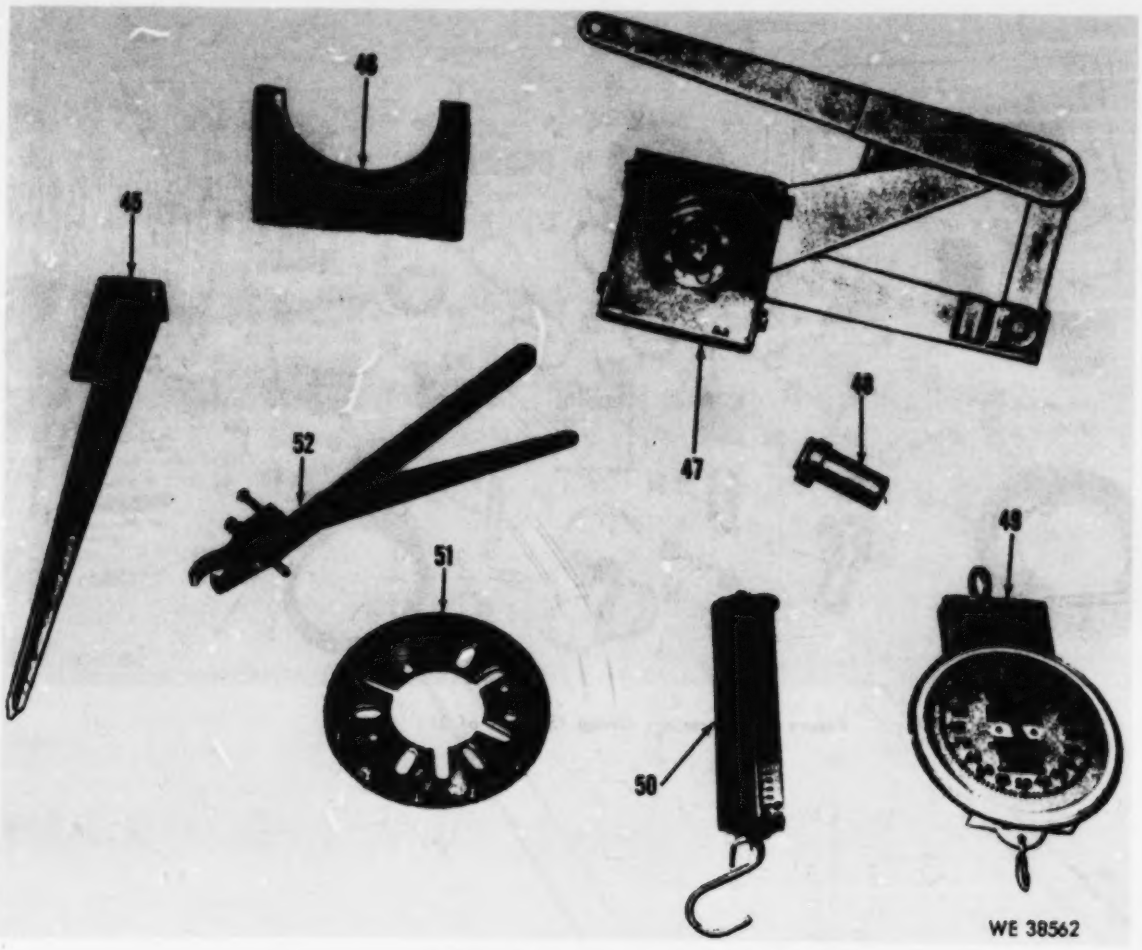

Figure 11. Accessory Group (Sheet 2 of 2)

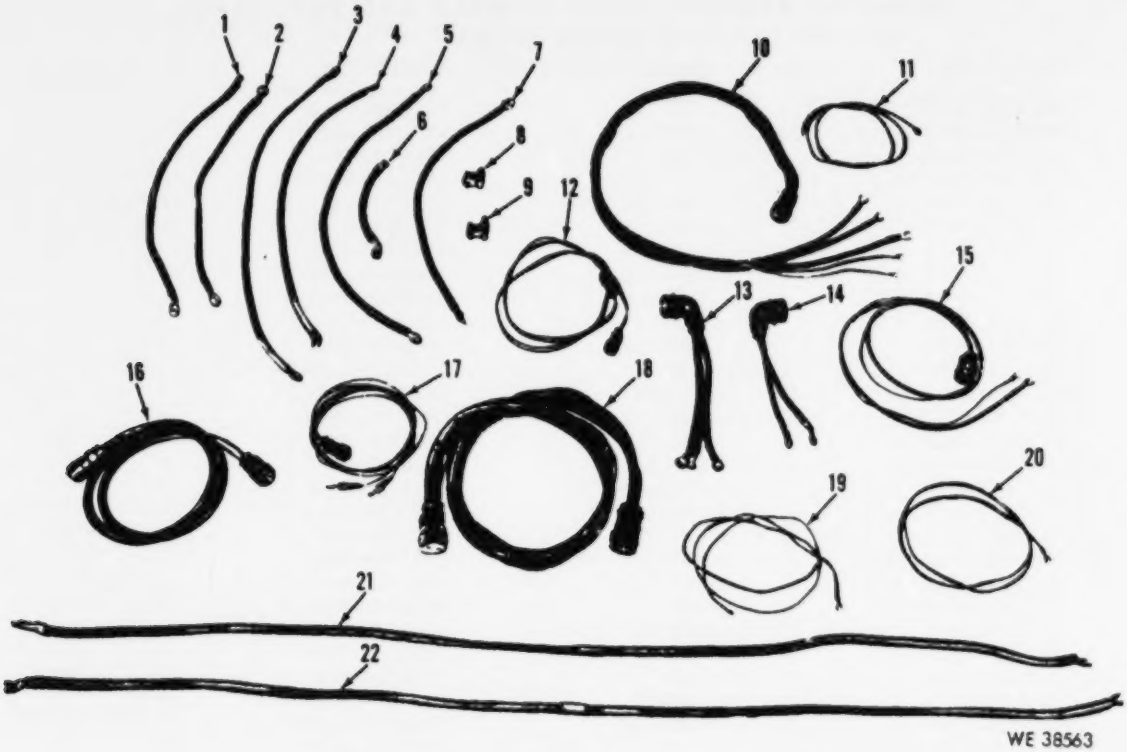

Figure 12. Cable Assembly Group (Sheet 1 of 2)

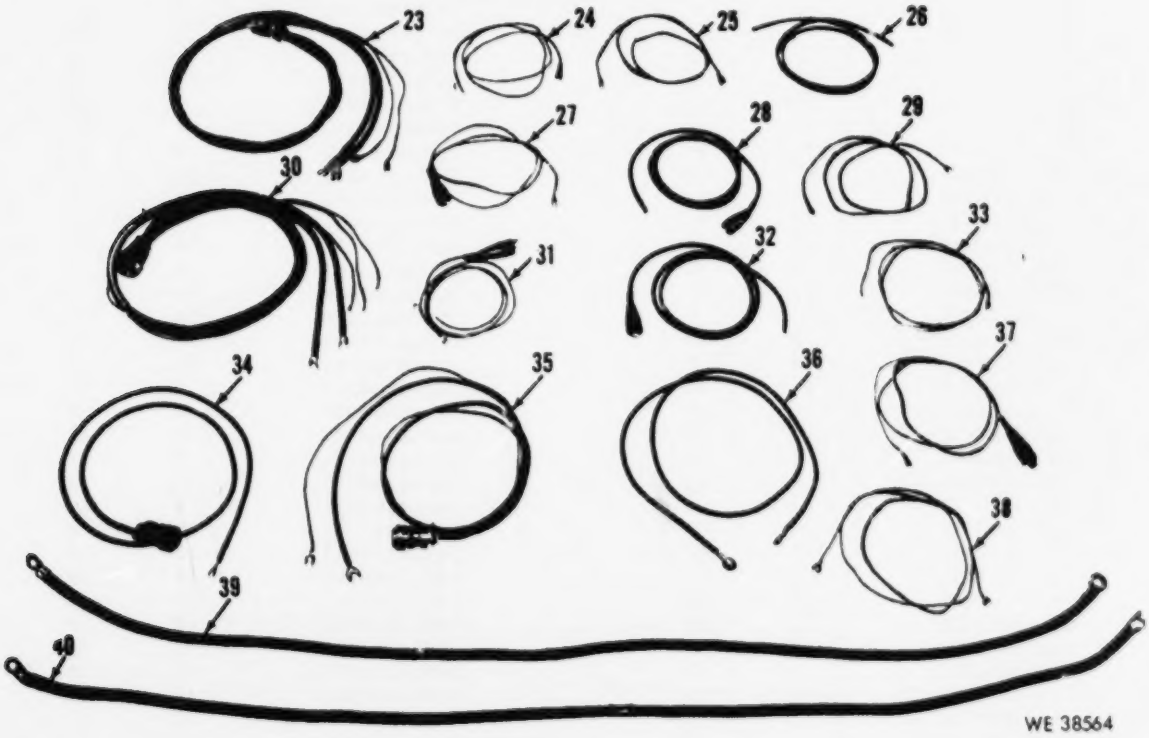

Figure 12. Cable Assembly Group (Sheet 2 of 2)

Section III. FEDERAL STOCK NUMBER AND REFERENCE NUMBER INDEX

STOCK NUMBER	FIGURE NO	ITEM NO
3020-253-5878	11	30
3020-253-5879	11	29
3030-249-4311	4	6
3030-834-5926	11	16
3030-834-5928	11	15
3030-834-5935	11	17
3110-156-4755	5	13
4910-137-2081	5	18
4910-137-2082	5	20
4910-137-2086	4	2
4910-137-2089	5	22
4910-137-2090	5	19
4910-231-0301	12	17
4910-253-5867	11	18
4910-253-5868	11	34
4910-253-5869	11	19
4910-253-5870	11	7
4910-253-5871	11	48
4910-253-5872	11	1
4910-253-5873	11	13
4910-253-5874	11	8
4910-253-5876	11	47
4910-253-5877	11	38
4910-254-6319	12	30
4910-254-6320	11	44
4910-254-6321	11	9
4910-254-6322	11	31
4910-254-6323	11	20
4910-254-6324	11	40
4910-254-6325	11	21
4910-254-6326	11	27
4910-254-6327	11	11
4910-254-6328	11	51
4910-254-6329	11	12
4910-254-6330	11	3
4910-254-6331	11	22
4910-254-6332	11	14
4910-254-6333	11	46
4910-254-6335	11	32
4910-254-6336	11	28
4910-254-6337	11	45
4910-254-6338	11	2
4910-254-6340	11	35
4910-254-6341	11	33
4910-431-8363	2	2
4910-431-8364	2	13
4910-461-1032	2	3
4910-786-4118	11	36
4910-789-0479	11	10
5305-068-0498	2	20
5305-068-0501	2	4
5305-723-9385	2	12
5305-956-7184	11	6
5305-988-1723	2	8
5305-989-7434	2	21
5306-225-9089	2	19
5307-410-4935	11	39
5310-014-5850	2	22
5310-045-3296	2	23
5310-081-4219	2	17
5310-177-7697	11	24
5310-407-9566	2	18
5310-550-1130	2	9
5310-582-5965	2	5
5310-809-4058	2	6
5310-880-7746	2	15
5315-781-2025	6	4
5315-781-2025	11	25
5315-781-2027	11	26
5315-841-7437	11	5
5340-549-6581	12	8
5340-549-6583	12	9
5340-900-5219	11	23
5355-351-2914	9	10
5905-231-7692	8	11
5905-762-4696	9	12
5905-936-8106	8	5
5910-936-8103	9	24
5920-465-8906	8	3
5920-465-8906	11	41
5920-465-8907	9	37
5920-465-8908	8	4
5920-783-7859	11	42
5925-936-8082	9	32
5925-936-8094	7	4
5925-936-8095	8	2
5925-936-8096	9	33
5930-357-0341	9	17
5930-357-0363	9	19
5930-357-0427	9	20
5930-357-0431	9	18
5930-357-04444	9	16
5930-357-0485	9	27
5930-357-0521	9	28
5930-357-0641	8	1
5930-357-0716	10	11
5930-357-1108	9	41
5930-548-8264	9	30
5930-655-1513	9	26
5930-655-1514	10	10
5930-655-1514	9	34
5930-655-1515	9	23
5930-655-1522	9	13
5930-655-1575	10	12
5930-936-8073	9	21
5930-936-8105	8	15
5935-357-1182	10	2
5935-806-4588	10	3
5935-808-7458	10	4
5935-835-7450	10	1
5935-837-9892	10	5
5935-850-0233	10	6
5935-936-8112	9	25
5950-936-8099	7	5
5950-936-8101	9	29
5950-936-8102	7	1
5961-936-8097	7	6
5965-470-9521	11	37
5975-410-5993	11	4
5995-134-6675	12	35
5995-134-6676	12	18
5995-134-6677	12	12
5995-134-6685	12	16
5995-134-6686	12	23
5995-134-6687	12	34
5995-177-2341	12	15
5995-177-2342	12	14
5995-177-2344	12	13
5995-177-2345	12	10
5999-460-7183	8	7

Section III. FEDERAL STOCK NUMBER AND REFERENCE NUMBER INDEX—Continued

STOCK NUMBER	FIGURE NO	ITEM NO
5999-460-7191	8	6
5999-460-7195	8	8
6105-470-7484	2	16
6110-461-1044	8	14
6110-465-9133	8	13
6110-465-9134	8	13
6130-460-7168	7	2
6130-460-7171	7	3
6140-239-5973	12	1
6140-239-5974	12	2
6140-239-5977	12	3
6140-239-5978	12	4
6140-239-5980	12	5
6140-239-5981	12	6
6140-239-5982	12	7
6210-479-2977	9	35
6210-854-9195	9	38
6240-460-3949	9	40
6240-460-3952	9	39
6625-400-7683	12	25
6625-466-1989	9	6
6625-466-1990	9	1
6625-466-1991	9	2
6625-466-1992	9	3
6625-466-1993	9	7
6625-466-1994	9	4
6625-466-1996	8	12
6625-466-1999	9	31
6625-466-2000	9	8
6625-489-8421	12	37
6625-489-8422	12	36
6625-489-8423	12	29
6625-489-8424	12	11
6625-489-8425	12	19
6625-491-0541	12	33
6625-491-0582	12	21
6625-491-0583	12	27
6625-491-0584	12	31
6625-491-0585	12	20
6625-491-0586	12	26
6625-491-0587	12	39
6625-491-0588	12	38
6625-491-0591	12	22
6625-491-0592	12	40
6625-491-0610	12	28
6625-492-6138	12	24
6625-496-8542	12	32
6625-936-8062	8	10
6670-440-0317	11	50
6670-440-0318	11	49
6680-465-8905	9	5
6680-834-5941	11	43

REFERENCE NUMBER	MFG CODE	FIG NO	ITEM NO
A111497-B	79938	5	1
A15683	79938	5	10
A156848	79938	5	14
A15959	79938	5	20
A33	72781	11	16
AN15	79938	5	11
B1430-14	79470	5	17
B33	72781	11	15
C136416	79938	6	21
C15848	79938	5	18
C48859	79938	6	19
C548-1228	82386	2	1
C548-1235	82386	11	21
C548-1820	82386	11	27
C548-2141	82386	11	19
C548-2147	82386	11	40
C548-2148	82386	11	38
C548-2149	82386	11	28
C548-2155	82386	11	39
C548-2156	82386	11	33
C548-2160	82386	11	24
C548-2161	82386	11	30
C548-2162	82386	11	29
C548-2163	82386	11	13
C548-2168	82386	11	12
C548-2169	82386	11	20
C548-2170	82386	11	31
C548-2177	82386	11	47
C548-2188	82386	11	48
C548-2194	82386	11	52
C548-2195	82386	11	45
C548-2198	82386	11	51
C548-2199	82386	11	46
C548-2202	82386	11	1
C548-2203	82386	11	3
C548-2204	82386	11	4
C548-2205	82386	11	8
C548-2206	82386	11	9
C548-2207	82386	11	7
C548-2226	82386	11	11
C548-2232	82386	11	2
C548-2233	82386	2	2
C548-2242	82386	11	32
C548-2243	82386	11	22
C548-2244	82386	11	18
C548-2246	82386	11	35
C548-2249	82386	11	14
C548-4100-01	82386	12	38
C548-4100-02	82386	12	39
C548-4100-03	82386	12	26
C548-4100-04	82386	12	20
C548-4100-07	82386	12	31
C548-4100-08	82386	12	27
C548-4100-09	82386	12	21
C548-4100-10	82386	12	19
C548-4100-11	82386	12	11
C548-4100-12	82386	12	29
C548-4100-13	82386	12	33
C548-4100-14	82386	12	36
C548-4100-15	82386	12	37
C548-4100-16	82386	12	22
C548-4100-17	82386	12	40
C548-4100-18	82386	12	28
C548-4100-19	82386	12	32
C548-4101-01	82386	12	1
C548-4101-02	82386	12	2
C548-4101-03	82386	12	3

REFERENCE NUMBER	MFG CODE	FIG NO	ITEM NO
C548-4101-04	82386	12	4
C548-4101-05	82386	12	5
C548-4101-06	82386	12	6
C548-4101-07	82386	12	7
C548-4102	82386	12	10
C548-4103	82386	12	13
C548-4104	82386	12	14
C548-4105	82386	12	15
C548-4106	82386	12	34
C548-4107	82386	12	35
C548-4108	82386	12	18
C548-4109	82386	12	12
C548-4110	82386	12	16
C548-4112-01	82386	12	24
C548-4112-02	82386	12	25
C548-4113	82386	12	17
C548-4114	82386	12	23
C548-4115	82386	12	30
C548-5200	82386	10	13
C548-5206	82386	10	7
C548-5413	82386	9	11
C548-5415	82386	9	22
C548-5700	82386	11	44
C76070	79938	5	5
D-27183	79938	6	12
DZ-4119-A	79938	5	2
DZ-4119-A	79938	6	6
DZ-4814-A	79938	6	9
H36472	79938	5	19
M-60-N	79938	6	16
MS 166-30-1137	96906	11	23
MS 20068-253	96906	6	4
MS 20068-253	96906	11	25
MS 20068-275	96906	11	26
MS 27183-10	96906	2	6
MS 27183-12	96906	2	17
MS 27183-42	96906	2	22
MS 3102R16S10P	96906	10	3
MS 3102R16-10S	96906	10	4
MS 3102R22-7SC	96906	10	1
MS 3102R32-15P	96906	10	6
MS 3102R32-158C	96906	10	5
MS 35058-21	96906	9	26
MS 35058-22	96906	10	10
MS 35058-22	96906	9	34
MS 35058-23	96906	9	23
MS 35058-30	96906	9	13
MS 35059-22	96906	10	12
MS 35207-263	96906	2	21
MS 35207-279	96906	2	8
MS 35333-40	96906	2	9
MS 35338-43	96906	2	23
MS 35338-44	96906	2	5
MS 35338-45	96906	2	18
MS 51963-65	96906	2	12
MS 51968-5	96906	2	15
MS 90725-1	96906	2	20
MS 90725-5	96906	2	4
MS 90726-34	96906	2	19
ND 5611-L1A	43334	6	3
OB-1	04009	9	30
SKF 6309	52676	6	13
SKF 6405	52676	6	10
W15	79938	5	12
W151	21741	8	13
W158	21741	8	13
X135500-A	79938	6	8

REFERENCE NUMBER	MFG CODE	FIG NO	ITEM NO
X135502-A	79938	6	7
X135503	79938	6	20
X135504	79938	6	11
X581095A	79938	5	15
X581096	79938	6	24
X581097	81300	4	6
X214651B	79938	4	2
XA224027-A	79938	6	22
XA504119	79938	6	18
XA551411-B	79938	5	22
XA584484	79938	5	9
XB136445	79938	5	16
XB566978A	79938	6	23
XC552390-B	79928	6	2
XC556522	79938	6	17
XC584426	79938	4	1
XD134958	79938	6	25
XD566767-43	79938	5	6
0001-5006	82386	11	49
0001-5007	82386	11	50
0500-5003	82386	9	6
0500-5004	82386	9	7
0500-5005	82386	9	5
0500-6001	82386	9	2
0500-6002	82386	9	1
0500-6003	82386	9	4
0500-6004	82386	9	3
0502-5001	82386	2	16
0516-5001	82386	8	1
0685-5001	82386	9	12
0685-5006	82386	8	5
0744-5001	82386	8	12
0744-5003	82386	8	10
0762-5001	82386	9	21
0762-5002	82386	9	17
0762-5003	82386	9	19
0762-5004	82386	9	20
0762-5005	82386	9	18
0762-5006	82386	9	16
0762-5009	82386	9	27
0771-5001	82386	7	6
0778-5002	82386	7	1
0778-5003	82386	7	3
0778-5004	82386	7	2
0778-5005	82386	7	5
0794-5402	82386	8	14
0799-132	82386	9	28
0828-5001	82386	9	8
10640971-1	18876	11	6
128701	79938	5	8
13504	79938	5	4
136610	79938	5	7

REFERENCE NUMBER	MFG CODE	FIG NO	ITEM NO
140-008	82386	11	36
1417	82386	9	36
1417-004	82386	8	4
1493-3	82386	9	10
15869	79938	4	3
15961	79938	5	21
1922-026	82386	9	33
1922-5004	82386	8	2
1922-5006	82386	9	32
1922-5008	82386	7	4
2139-5001	82386	9	31
2207-5002	82386	8	15
2-764	82386	11	10
3L350	72781	11	17
3046-5001-01	82386	11	34
31627	99664	11	43
3174-016	82386	8	7
3174-017	82386	8	8
3174-019	82386	8	6
3931-5001	82386	9	25
3945-5001	82386	9	29
4120	79938	6	5
4120	79938	5	3
414015	75915	11	42
4162-5014	82386	10	2
47D1367	99664	10	9
47D1367	99664	9	14
47D1368	99664	9	15
47D1368	99664	10	8
5215	52676	5	13
555742	79938	4	5
5688-5002	82386	11	5
60-M	79938	6	15
679-362	82386	9	24
684-390	82386	8	11
689-218	82386	9	41
689-5001	82386	10	11
70-06	81812	11	37
739-014	82386	11	41
739-014	82386	8	3
739-022	82386	9	37
740-010	82386	9	35
740-020	82386	9	38
75004-1	96906	12	8
75004-2	96906	12	9
758-114	82386	9	9
8001-5001	82386	2	3
8033-5501	82386	3	1
806-5001	82386	2	13
910-9	82386	9	39
910-030	82386	9	40
95250	79938	6	1

By Order of the Secretary of the Army:

W. C. WESTMORELAND,
General, United States Army,
Chief of Staff.

Official:

VERNE L. BOWERS,
Major General, United States Army,
The Adjutant General.

DISTRIBUTION:

Active Army
- DCSLOG (1)
- CNGB (1)
- TSG (1)
- COE (2)
- Dir of Trans (2)
- ACSC-E (1)
- USAARENBD (1)
- CONARC (3)
- ARADCOM (2)
- ARADCOM Rgn (2)
- OS Maj Comd (3)
- LOGCOMD (1) except
  - USAREUR (3)
- USAMC (2)
- USAAVSCOM (2)
- USAMECOM (3)
- USAMUCOM (3)
- USATACOM (5)
- USAWECOM (75)
- USARSO (Panama) (2)
- Armies (3) except
  - Seventh (5)
  - Eighth (5)
- Corps (2)
- USAECFB (1)
- USAOC&S (3)
- USAQMCENFL (1)
- USAQMS (1)
- USAFACFS (2)
- USATC (3)
- Army Dep (3) except
  - PUAD (5)
  - TEAD (5)
  - LEAD (5)
  - CHAD (5)
- Gen Dep (2)
- USACDCEC (10)
- PG (1)
- EAMTMTS (1)
- WAMTMTS (1)
- Arsenals (2) except
  - Detroit (5)
  - Rock Island (10)
- Engr FLDMS (2)
- Ft Knox FLDMS (1)
- 4th USASA Fld Sta (1)
- Units org under fol TOE:
  - (2 cys each)
  - 29-1
  - 29-11
  - 29-15
  - 29-16
  - 29-21
  - 29-25
  - 29-26
  - 29-27
  - 29-35
  - 29-36
  - 29-75
  - 29-77
  - 29-79
  - 29-99
  - 29-134
  - 29-135
  - 29-137
  - 29-138
  - 29-147
  - 29-205
  - 29-207
  - 29-208
  - 29-245
  - 29-247
  - 29-427
  - 29-600

ARNG: None

USAR: None

For explanation of abbreviations used, see AR 310-50.

☆ U. S. GOVERNMENT PRINTING OFFICE : 1989 O -242-451 (05156)

PIN : 008529-000